HITACHI
Inspire the Next

Installation & Maintenance Manual

INVERTER-DRIVEN MULTI-SPLIT SYSTEM HEAT PUMP AIR CONDITIONERS

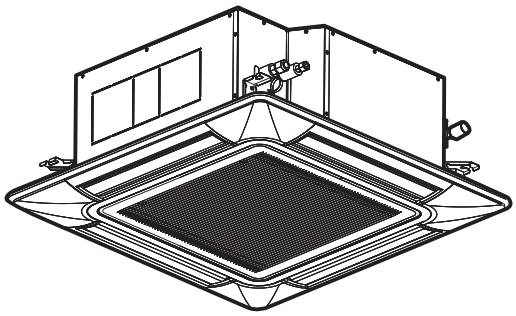

Type	Model
4-Way Cassette	RCI-1.0FSN3 RCI-1.5FSN3 RCI-2.0FSN3 RCI-2.5FSN3 RCI-3.0FSN3 RCI-4.0FSN3 RCI-5.0FSN3 RCI-6.0FSN3

IMPORTANT:

READ AND UNDERSTAND THIS MANUAL BEFORE USING THIS HEAT-PUMP AIR CONDITIONERS. KEEP THIS MANUAL FOR FUTURE REFERENCE.

P5414946

IMPORTANT NOTICE

- HITACHI pursues a policy of continuing improvement in design and performance of products. The right is therefore reserved to vary specifications without notice.
- HITACHI cannot anticipate every possible circumstance that might involve a potential hazard.
- This heat pump air conditioner is designed for standard air conditioning only. Do not use this heat pump air conditioner for other purpose such as drying clothes, refrigerating foods or for any other cooling or heating process.
- Do not install the unit in the following places. It may cause a fire, deformation, corrosion or failure.
  * Places where oil (including machinery oil) may be present in quantities.
  * Places where a lot of sulfide gas drifts such as in a hot spring.
  * Places where inflammable gas may generate or flow.
  * Places where strong salty wind blows such as coast regions.
  * Places with an atmosphere of acidity or alkalinity.
- Do not install the unit in the place where silicon gas drifts. If the silicon gas attaches to the surface of heat exchanger, the fin surface repels water. As a result, drain water splashes outside of the drain pan and splashed water runs inside of electrical box. In the end, water leakage or electrical devices failure may occur.
- Pay attention to the following points when the unit is installed in a hospital or other facilities where an electromagnetic wave generates from a medical equipment.
  * Do not install the unit in the place where an electromagnetic wave is directly radiated to the electrical box, remote control cable or remote control switch.
  * Install the unit at least 3 meters away from an electromagnetic wave such as a radio.
- Do not install the unit in the place where the breeze directly catches animals and plants. It could adversely affect animals and plants.
- The installer and system specialist shall secure safety against the refrigerant leakage according to local regulations or standards. The following standards may be applicable, if local regulations are not available. International Organization for Standardization, ISO5149 or European Standard, EN378 or Japan Standard, KHKS0010.
- No part of this manual may be reproduced without written permission.
- It is assumed that this heat pump air conditioner will be operated and serviced by English speaking people. If this is not the case, the customer should be add safety, caution and operating signs in the native language.
- If you have any questions, contact your distributor or dealer of HITACHI.
- This manual gives a common description and information for this heat pump air conditioner which you operate as well for other models.
- This heat pump air conditioner has been designed for the following temperatures. Operate the heat pump air conditioner within this range.

Temperature (°C)

		Maximum	Minimum
Cooling Operation	Indoor	32 DB/23 WB	21 DB/15 WB
	Outdoor	46 DB *	-5 DB *
Heating Operation	Indoor	27 DB	15 DB
	Outdoor	15 WB *	-20 WB *

DB: Dry Bulb, WB: Wet Bulb

* The temperature may change depending on the outdoor unit.

This manual should be considered as a permanent part of the air conditioning equipment and should remain with the air conditioning equipment.

CHECKING PRODUCT RECEIVED

- Upon receiving this product, inspect it for any shipping damage.
  Claims for damage, either apparent or concealed, should be filed immediately with the shipping company.
- Check the model number, electrical characteristics (power supply, voltage and frequency) and accessories to determine if they are correct.

The standard utilization of the unit shall be explained in these instructions.
Therefore, the utilization of the unit other than those indicated in these instructions is not recommended.
Please contact your local agent, as the occasion arises.
HITACHI's liability shall not cover defects arising from the alteration performed by a customer without HITACHI's consent in a written form.

TABLE OF CONTENTS

1. Safety Summary 1

2. Structure 5
   - 2.1 Name of Parts 5
   - 2.2 Refrigerant Cycle 6
   - 2.3 Necessary Tools and Instrument List for Installation 7

3. Transportation and Handling 7
   - 3.1 Transportation 7
   - 3.2 Handling of Indoor Unit 7

4. Indoor Unit Installation 8
   - 4.1 Factory-Supplied Accessories 8
   - 4.2 Initial Check 9
   - 4.3 Installation 10
     - 4.3.1 Opening of False Ceiling and Suspension Bolts 10
     - 4.3.2 Mounting Position of the Indoor Unit 11
     - 4.3.3 Mounting the Indoor Unit 12
     - 4.3.4 Adjusting the Space between Indoor Unit and False Ceiling Opening 12
     - 4.3.5 Installation Details for Air Panel 14

5. Refrigerant Piping Work 15
   - 5.1 Piping Materials 15
   - 5.2 Piping Connection 15

6. Drain Piping 17

7. Electrical Wiring 20
   - 7.1 General Check 20
   - 7.2 Electrical Wiring Capacity 21
     - 7.2.1 Field Minimum Wire Sizes for Power Source 21
     - 7.2.2 Details of Electrical Wiring Connection 22
   - 7.3 Position of Electrical Wiring Connection 25
   - 7.4 Transition Wiring for Remote Control Switch 28
     - 7.4.1 Cautions for Individual Louver Setting 30
     - 7.4.2 Cautions for Air Panel with Motion Sensor 31
     - 7.4.3 Caution for Control Wiring 32
   - 7.5 Wiring Connection 33
   - 7.6 Dip Switches Setting 33
   - 7.7 Function Selectionby Remote Control Switch 34

8. Test Run 36
   - 8.1 Before Test Run 36
   - 8.2 Test Run 36

9. Safety and Control Device Setting 41

1. Safety Summary

< Signal Words >

● Signal words are used to identify levels of hazard seriousness.
Definitions for identifying hazard levels are provided below with their respective signal words.

⚠ DANGER : DANGER indicates a hazardous situation which, if not avoided, will result in death or serious injury.

⚠ WARNING : WARNING indicates a hazardous situation which, if not avoided, could result in death or serious injury.

⚠ CAUTION : CAUTION, used with the safety alert symbol, indicates a hazardous situation which, if not avoided, could result in minor or moderate injury.

NOTICE : NOTICE is used to address practices not related to personal injury.

NOTE : NOTE is useful information for operation and/or maintenance.

⚠ DANGER

- Do not perform the installation work, refrigerant piping work, drain pump, drain piping and electrical wiring connection without referring to our installation manual. If the instructions are not followed, it may result in a water leakage, electric shock or a fire.
- Use the specified non-flammable refrigerant (R410A) to the outdoor unit in the refrigerant cycle.
  Do not charge material other than R410A into the unit such as hydrocarbon refrigerants (propane or etc.), oxygen, flammable gases (acetylene or etc.) or poisonous gases when installing, maintaining and moving. These flammables are extremely dangerous and may cause an explosion, a fire, and injury.
- Do not pour water into the indoor unit or outdoor unit. These products are equipped with electrical parts. If poured, it will cause a serious electrical shock.
- Do not open the service cover or access panel for the indoor or outdoor unit without turning OFF the main power supply.
- Do not touch or adjust safety devices inside the indoor unit or outdoor unit. If these devices are touched or readjusted, it may cause a serious accident.
- Refrigerant leakage can cause difficulty with breathing due to insufficient air. Turn OFF the main switch, extinguish any naked flames and contact your service contractor, if refrigerant leakage occurs.
- Make sure that the refrigerant leakage test should be performed.
  Refrigerant (Fluorocarbon) for this unit is non-flammable, non-toxic and odorless.
  However if the refrigerant is leaked and is contacted with fire, toxic gas will generate.
  Also because the fluorocarbon is heavier than air, the floor surface will be filled with it, which could cause suffocation.
- The installer and system specialist shall secure safety against refrigerant leakage according to local regulations or standards.
- Use an ELB (Earth Leakage Breaker).
  In the event of fault, there is danger of an electric shock or a fire if it is not used.
- Do not install the outdoor unit where there is high level of oil mist, flammable gases, salty air or harmful gases such as sulfur.
- For installation, firmly connect the refrigerant pipe before the compressor starts operating.
  For maintenance, relocation and disposal, remove the refrigerant pipe after the compressor stops.
- Do not perform a short-circuit of the protection device such as the pressure switch when operating.
  It may cause a fire and explosion.

⚠WARNING

- Do not use any sprays such as an insecticide, lacquer, hair spray or other flammable gases within approximately one (1) meter from the system.
- If the circuit breaker or fuse is often activated, stop the system and contact your service contractor.
- Check that the ground wire is securely connected. If the unit is not correctly grounded, it lead electric shock. Do not connect the ground wiring to a gas piping, water piping, lighting conductor or ground wiring for telephone.
- Connect a fuse of specified capacity.
- Before performing any brazing work, check to ensure that there is no flammable material around. When using the refrigerant be sure to wear leather gloves to prevent cold injuries.
- Protect the wires, electrical parts, etc. from rats or other small animals. If not protected, rats may gnaw at unprotected parts and which may lead to a fire.
- Fix the cables securely. External forces on the terminals could lead to a fire.
- Provide a sufficiently strong foundation. If not, the unit may fall down and it may lead to injuries.
- Do not install the unit in a place where oil, vapor, organic solvent and corrosive gas (ammonia, sulfur compound and acid) may be present in quantities.
  It may cause refrigerant leakage due to corrosion, electrical shock, deteriorated performance and breakage.
- Perform the electrical work according to Installation Manual and all the relevant regulation and standards. If the instructions are not followed, an electrical shock and fire may occur due to insufficient capacity and inadequate performance.
- Use specified cables between units and choose the cables correctly. If not, an electrical shock or fire may occur.
- Ensure that the wiring terminals are tightened securely with the specified torques. If not, generating fire or an electric shock at the terminal connection part may occur

⚠CAUTION

- Do not step or put any material on the product.
- Do not put any foreign material on the unit or inside the unit.
- Provide a strong and correct foundation so that;

  a. The outdoor unit is not on an incline.
  b. Abnormal sound dose not occur.
  c. The outdoor unit will not fall down due to a strong wind or earthquake.

NOTICE

- Do not install the indoor unit, outdoor unit, remote control switch and cable within approximately 3 meters from strong electromagnetic wave radiators such as medical equipments.
- Supply electrical power to the system to energize the oil heater for 12 hours before startup after a long shutdown.
- Make sure that the outdoor unit is not covered with snow or ice, before operation.
- In some cases, the packaged air conditioner may not be operated normally under the following cases.
  * In case that electrical power for the packaged air conditioner is supplied from the same power transformer as the device*.
  * In case that the power source wires for the device* and the packaged air conditioner are located close to each other.

  (Device*: (Ex) Lift, container crane, rectifier for electric railway, inverter power device, arc furnace, electric furnace, large-sized induction motor and large-sized switch.
  It consumes a large quantity of electrical power.)

  Regarding the cases mentioned above, surge voltage may be inducted in the power supply wiring for the packaged air conditioner due to a rapid change in power consumption of the device and an activation of switch.
  Therefore, check the field regulations and standards before performing electrical work in order to protect the power supply for the packaged air conditioner.

NOTE

- It is recommended that the room will be ventilated every 3 to 4 hours.
- The heating capacity of the heat pump unit is decreased according to the outdoor air temperature. Therefore, it is recommended that auxiliary heating equipment be used in the field when the units is installed in a low temperature region.

2. Structure

2.1 Name of Parts

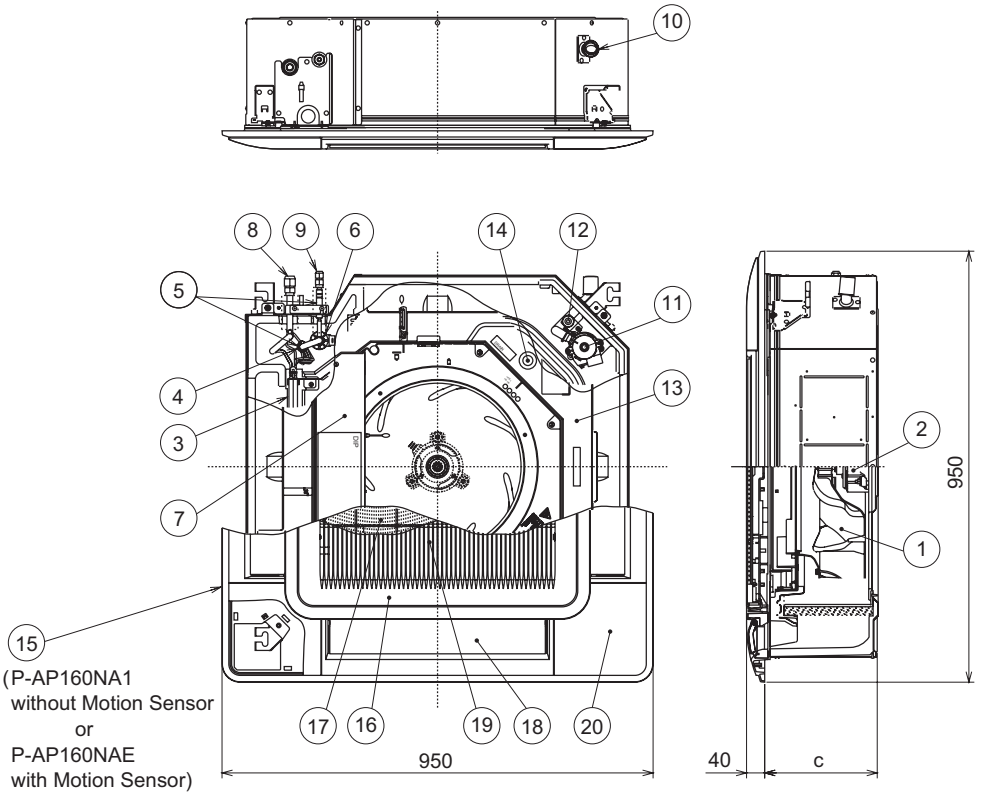

No.	Part Name	Remarks
1	Fan	
2	Fan Motor	DC
3	Heat Exchanger	
4	Distributor	
5	Strainer	
6	Micro-Computer Control Expansion Valve	
7	Electrical Control Box	
8	Refrigerant Gas Pipe Connection	with ϕa Flare Nut
9	Refrigerant Liquid Pipe Connection	with ϕb Flare Nut
10	Drain Pipe Connection	VP25
11	Drain Discharge Mechanism	
12	Float Switch	
13	Drain Pan	
14	Rubber Plug for Drain	
15	Air Panel (P-AP160NA1, P-AP160NAE)	Optional
16	Air Inlet Grille	
17	Air Filter	
18	Air Outlet	
19	Air Inlet	
20	Cover for Corner Pocket	(P-AP160NA1) (P-AP160NAE)

Model	a	b	c
RCI-1.0FSN3	12.7	6.35	248
RCI-1.5FSN3	12.7	6.35	248
RCI-2.0FSN3	15.88	6.35	248
RCI-2.5FSN3	15.88	9.52	248
RCI-3.0FSN3	15.88	9.52	298
RCI-4.0FSN3	15.88	9.52	298
RCI-5.0FSN3	15.88	9.52	298
RCI-6.0FSN3	15.88	9.52	298

2.2 Refrigerant Cycle

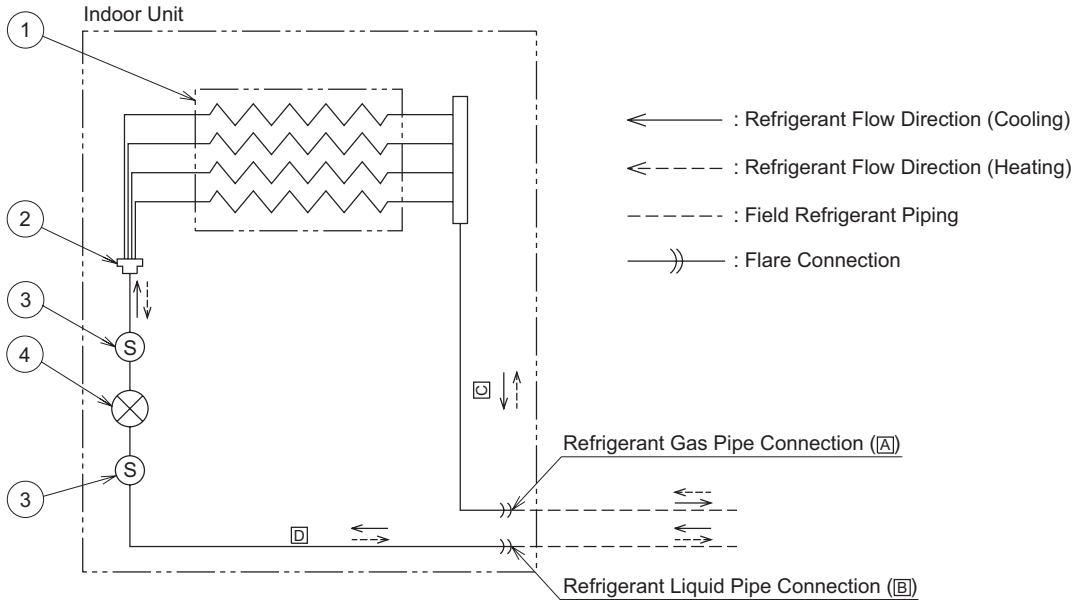

Mark	Part Name
1	Heat Exchanger
2	Distributor
3	Strainer
4	Micro-Computer Control Expansion Valve

HP	1.0, 1.5	2.0	2.5 to 6.0
A (Gas Pipe Connection)	ϕ12.7 x 0.8	ϕ15.88 x 1.0	ϕ15.88 x 1.0
B (Liquid Pipe Connection)	ϕ9.52 x 0.8	ϕ9.52 x 0.8	ϕ9.52 x 0.8
C (OD x T)	ϕ12.7 x 0.8	ϕ12.7 x 0.8	ϕ15.88 x 1.0
D (OD x T)	ϕ12.7 x 0.8	ϕ12.7 x 0.8	ϕ12.7 x 0.8

2.3 Necessary Tools and Instrument List for Installation

No.	Tool	No.	Tool
1	Handsaw	11	Spanner
2	Phillips Screwdriver	12	Charging Cylinder
3	Vacuum Pump	13	Gauge Manifold
4	Refrigerant Gas Hose	14	Cutter for Wires
5	Megohmmeter	15	Gas Leak Detector
6	Copper Pipe Bender	16	Leveller
7	Manual Water Pump	17	Clamper for Solderless Terminals
8	Pipe Cutter	18	Hoist (for Indoor Unit)
9	Brazing Kit	19	Ammeter
10	Hexagon Wrench	20	Voltage Meter
		21	Wrench

NOTE

About vacuum pump, gas hose, charging cylinder, gauge manifold, please use suitable equipments for using the refrigerant respectively. Do not mix other refrigerant.

3. Transportation and Handling

3.1 Transportation

- Transport the product as close to the installation location as practical before unpacking.
- Do not put any material on the indoor unit.
- The indoor unit is packed upside down against the installation direction and the foamed polystyrene drain pan is exposed to the upper side. Do not put the indoor unit with the drain pan downward during the process from unpacking the indoor unit until hanging up the unit to a ceiling. In addition, do not handle the indoor unit with the drain pan portion or the air outlet portions.
- Pay attention to handle the indoor unit. If an excessive force is applied to the indoor unit, it may cause a breakage because the indoor unit is adopted the foamed polystyrene.

⚠ CAUTION

Do not put any material on the product or the air panel.
Do not step on the product.

3.2 Handling of Indoor Unit

⚠ WARNING

Do not put any foreign material into the indoor unit and check to ensure that no foreign material exists in the indoor unit before the installation and the test run. Otherwise, a fire or failure, etc. may occur.

⚠ CAUTION

Do not hold the resin covers when holding or lifting the indoor unit.

- To avoid damage to the resin covers, before lifting or moving the indoor unit, put a cloth on the resin covers.

4. Indoor Unit Installation

⚠ DANGER

Do not install the indoor unit in a flammable environment to avoid fire or an explosion.

⚠ WARNING

- **Do not put any foreign material into the indoor unit and check to ensure that none exists in the indoor unit before the installation and the test run. Otherwise, a fire or failure, etc. may occur.**
- **Check to ensure that the ceiling is strong enough. If not strong enough, the indoor unit may fall down on you.**
- **Do not install the indoor unit to outdoors. If installed, an electric hazard or electric leakage will occur.**

4.1 Factory-Supplied Accessories

Check to ensure that the following accessories are packed with the indoor unit.
The hose band, screws, washers and plastic bands are put in the pipe insulation.

NOTE

- If any of these accessories are not packed with the unit, please contact your contractor.
- The air panel, the remote control switch and the branch pipes are optional accessories which are not included with the indoor unit.

Table 4.1 Factory-Supplied Accessories

Accessory	Q'ty	Purpose
Pattern Board (Carton Board)	1	For Adjusting Space of False Ceiling Opening and Position of the Unit
Checking Scale (Cut and Take Out it from the Carton Board)	1	
Cross Recessed Head Screws (M6)	4	For Fitting Paper Pattern
Washer with Insulation Material (M10)	4	For Unit Installation
Washer (M10)	4	
Drain Hose	1	For Drain Hose Connection
Hose Clamp	1	
Pipe Insulation	1	For Refrigerant Piping Connection
Pipe Insulation	1	
Cord Clamp	2	For Fixing Remote Control Switch Wiring, Louver Sensor and Insulation of Piping
Cord Clamp	6	
Insulation (5Tx50x200)	1	For Covering Wiring Connection
Insulation (5Tx100x200)	1	For Covering Drain Connection
Insulation (5Tx25x500)	1	For Covering Drain Connection

Applicable Air Panel (Option): P-AP160NA1 (without Motion Sensor)
P-AP160NAE (with Motion Sensor)

4.2 Initial Check

- Install the indoor unit with a proper clearance around it for operation and maintenance working space, as shown in Fig. 4.1.
- Provide a service access door near the unit piping connection area on the ceiling.
- Check to ensure that the ceiling has a sufficient strength to hang the indoor unit.
- Check the ceiling surface is flat for the air panel installation work.

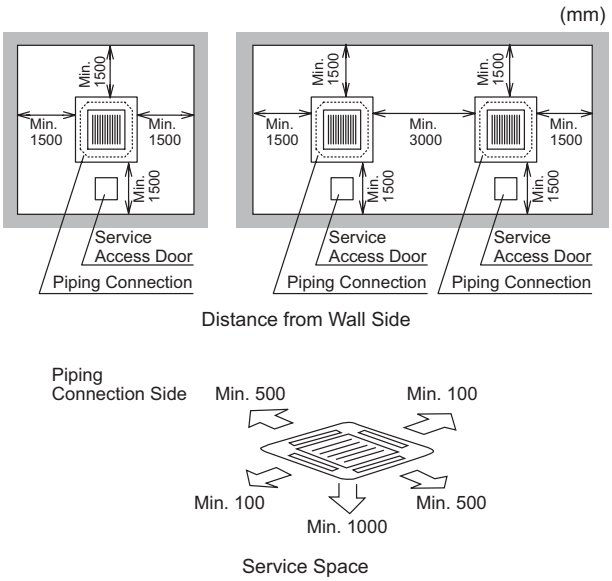

Fig. 4.1 Space around Indoor Unit

- Select the installation location as follows:
  (A) Minimum Space
  (B) Down Slope Pitch of Drain Piping: 1/25 to 1/100

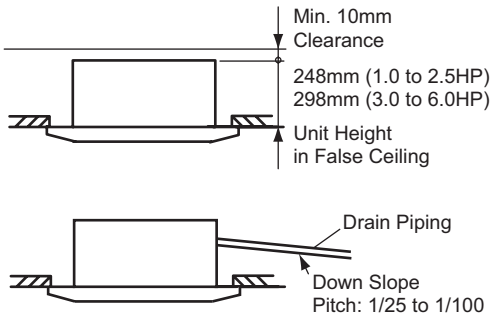

Fig. 4.2 Installation Location of Indoor Unit

- The sensing area for the motion sensor is shown in the figure below when applying the motion sensor with the air panel.

Installation Height of Indoor Unit h (m)	2.7	3.2
Sensing Area for Motion Sensor ϕa (m)	Approx. 7.0	Approx. 8.8
Motion Detection	Human Motion	

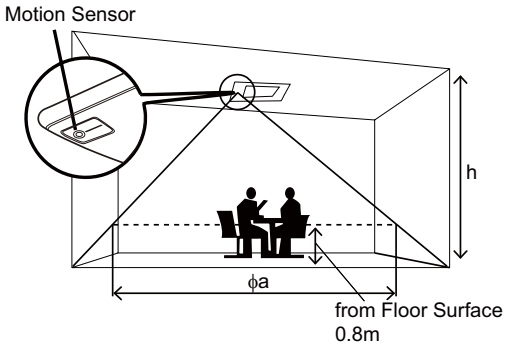

- Consider the air distribution from the indoor unit to the space of the room, and select a suitable location so that uniform air temperature in the room can be obtained.
  It is recommended that the indoor unit be installed 2.4 to 2.7 (2.9 to 3.2)* meters from the floor level. If the unit is installed higher than 2.7 (3.2)* meters, it is also recommended that the setting of increasing fan speed or 3-way Outlet Parts Set (Option) be utilized so that uniform air distribution is available.
  ( )*: In the case of 4.0, 5.0 and 6.0HP
- Do not install flammable parts in the service space for the indoor unit.
- Avoid obstacles which may hamper the air intake or the air discharge flow.
- Do not install the indoor unit in a machinery shop or kitchen where vapor from oil or its mist flows to the indoor unit.
  An oil will deposit on the heat exchanger, thereby reducing the indoor unit performance and the plastic parts may deform, and in the worst case, break due to splash oil at operation.
- Pay attention to the following points when the indoor unit is installed in a hospital or other facilities where there are electronic waves from medical equipment, etc.
  (A) Do not install the indoor unit where the electromagnetic wave is directly radiated to the electrical box, remote control cable or remote control switch.
  (B) Install the indoor unit and components as far as practical or at least 3 meters from the electromagnetic wave radiator.
  (C) Prepare a steel box and install the remote control switch in it. Prepare a steel conduit tube and wire the remote control cable in it. Then, connect the ground wire with the box and the tube.
  (D) Install a noise filter when the power supply emits harmful noises.

- To avoid any corrosive action to the heat exchangers, do not install the indoor unit in an acid or alkaline environment.
- The temperature and humidity inside the ceiling have the potential to exceed 30°C/RH (Relative Humidity) 80%. Thus, apply additional insulation materials to the indoor unit external surface to avoid dew condensation.
- The warmed air may stay at the high ceiling space during the heating operation. Thus, the parallel installing of a circulator is recommended.
- Avoid installing the air conditioning where the direct airflow blows from the air outlet to the temperature detecting devices such an alarm device or a control device. It may cause a failure of an alarm device or a control device.
- Multiple Combinations
  The twin combination, the triple combination and the quad combination for simultaneous operation of indoor units are installed in a same room and required to operate with equal conditions. In the case of these combination indoor unit types, if each indoor unit is partitioned by a wall, furniture or a curtain, etc, it may cause an operation failure. In addition, in the case of rearranging furniture or remodeling an interior after the installation, pay attention to effects for indoor units combination operation.

⚠ WARNING

- **Check to ensure that the number of below is within 0.3kg/m³. Otherwise it may cause danger situation if the refrigerant in the Outdoor Unit leaks into the room where this Indoor Unit is installed.**

$$\frac{\text{(Total Refrigerant Quantity per one Outdoor Unit)}}{\text{(Volume of the room where this Indoor Unit is installed.)}} \leq 0.3\text{kg/m}^3$$

In detail, refer to the Installation Manual for outdoor unit.

- **Make sure that the refrigerant leakage test should be performed. The refrigerant (Fluorocarbon R410A) for this unit is incombustible, non-toxic and odorless. However if the refrigerant is leaked and is contacted with fire, toxic gas will generate. Also because the fluorocarbon is heavier than air, the floor surface will be filled with it, which could cause suffocation.**

4.3 Installation

4.3.1 Opening of False Ceiling and Suspension Bolts

(1) Determine the final location and installation direction of the indoor unit paying careful attention to the space for the piping, wiring and maintenance.

(2) Cut out the area for the indoor unit in the false ceiling and install suspension bolts, as shown in Fig. 4.3.

(3) Pattern Board and Checking Scale for Installation
The pattern board for installation and the checking scale are printed on the packing. Cut off the checking scale for dimension of opening from packing.
The usage is shown in the item 4.3.4.

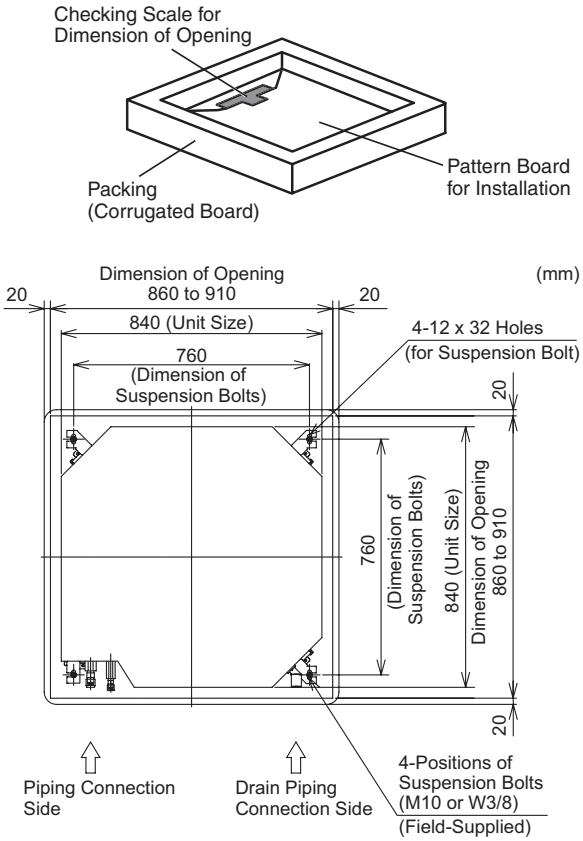

Fig. 4.3 Opening of False Ceiling and Suspension Bolts

NOTE:
Ceiling Work: It is different depending on the building structure. Consult with an architect or an interior finish worker for more information.

- Do not install electric light units and the indoor unit to the same furring for ceiling. If installed, electric lights may flicker or vibrate by the indoor unit operation. When installing the indoor unit and electric lights, a furring for ceiling must be separated for each.

(4) Check to ensure that the ceiling is horizontally level, otherwise drainage can not flow.

(5) Strengthen the opening parts of the false ceiling.

(6) Mount suspension bolts, as shown in Fig. 4.4.

(7) Strengthen suspension bolts with support plates for the earthquake resistant depending on the needs of the quakeproof. Apply M10 of suspension bolts and support plates for the earthquake resistant. (Field-Supplied)

- For Concrete Slab

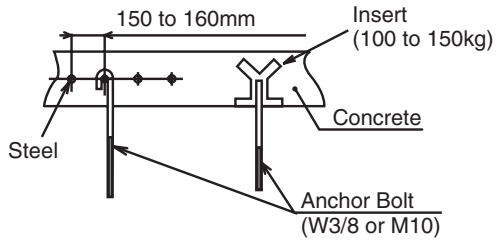

- For Steel Beam

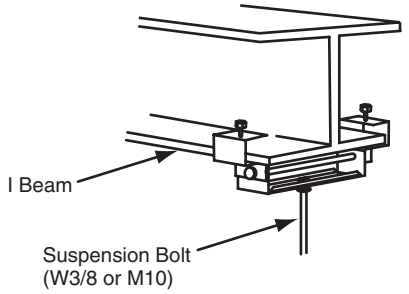

Fig. 4.4 Mounting the Suspension Bolts

4.3.2 Mounting Position of the Indoor Unit

(1) Mount the indoor unit to the position, as shown in Fig. 4.5.
The air panel (optional) may be deformed if the levelness of the indoor unit and the position of the suspension bracket are incorrect, and dew condensation may occur due to leaking air from the gap between the indoor unit and the air panel.

(2) The positional relation between the indoor unit and the air panel (optional) is shown in Fig. 4.5.

(mm)

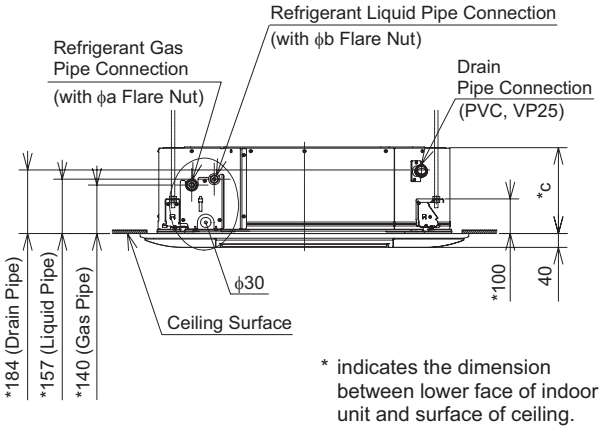

Model	a	b	c
RCI-1.0FSN3	12.7	6.35	248
RCI-1.5FSN3	12.7	6.35	248
RCI-2.0FSN3	15.88	6.35	248
RCI-2.5FSN3	15.88	9.52	248
RCI-3.0FSN3	15.88	9.52	298
RCI-4.0FSN3	15.88	9.52	298
RCI-5.0FSN3	15.88	9.52	298
RCI-6.0FSN3	15.88	9.52	298

Fig. 4.5 Mounting Position

4.3.3 Mounting the Indoor Unit

(1) Mount the nuts and washers to the suspension bolts.

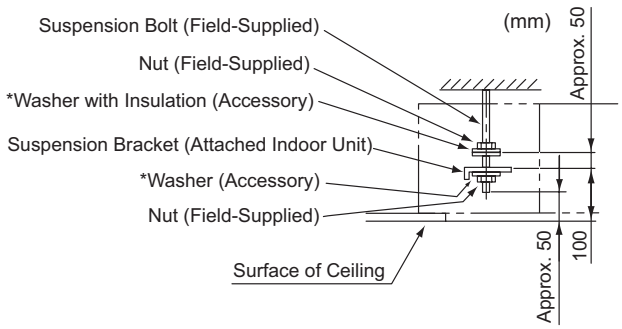

Fig. 4.6 Mounting Nuts and Washers

* Make sure that the washers (accessories) must be used for suspension bolt mounting on suspension bracket for tightening securely. The washer with insulation must be fitted keeping the insulation side downward to facilitate the hanging work.

(2) Lift the indoor unit by hoist, and do not apply any force to the drain pan (the air outlet portions and the drain pan portion).

(3) Insert the suspension bolts to the notches of the suspension brackets to hook the indoor unit, and check that the washers are as the stoppers at the rising part of the suspension bracket.

* The piping and wiring work inside the ceiling are required after hooking-up the indoor unit. Thus, determine the piping direction after selecting the final location for installation. Especially if the false ceiling has already been installed, complete all piping and wiring work until the piping and wiring connecting position inside the ceiling before hooking the indoor unit.

(4) Secure the indoor unit using the nuts, washers.

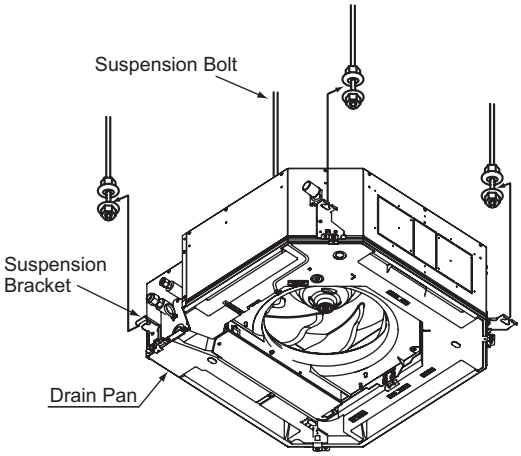

Fig. 4.7 Mounting the Indoor Unit

4.3.4 Adjusting the Space between Indoor Unit and False Ceiling Opening

⚠ CAUTION

- **Check the level of the drain pan using a water level to avoid incorrect operation of the drain discharge mechanism in the indoor unit.**
- **Tighten the nuts of the suspension brackets after the adjustment is completed. Apply LOCK-TIGHT paint* to the bolts and nuts in order to prevent them from loosening. If not done, abnormal noises or sounds may occur and the indoor unit may fall down.**

LOCK-TIGHT paint*: Paint the lock bolts and nuts. Adjust the indoor unit to the correct position while checking with the checking scales (factory-supplied).

(1) The pattern board for the installation and the checking scale are printed on the packing. Cut off the checking scale for dimension of opening from packing.

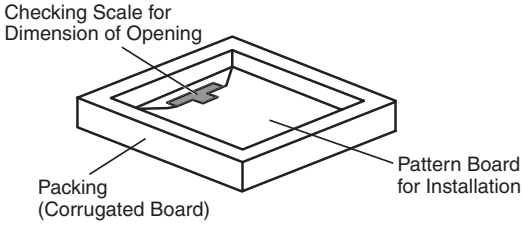

(2) Adjust the position of the indoor unit, as shown below by using the checking scale.

(a) Adjust the position between the indoor unit and the opening.

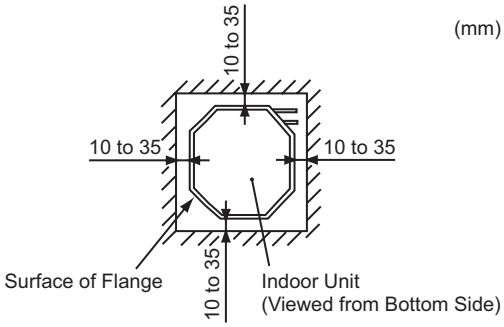

(b) For Ceiling Opening already Completed

When the opening is already completed, cut off the checking scale for the dimension of opening and adjust the clearance between the indoor unit and the opening, as shown in the figure.

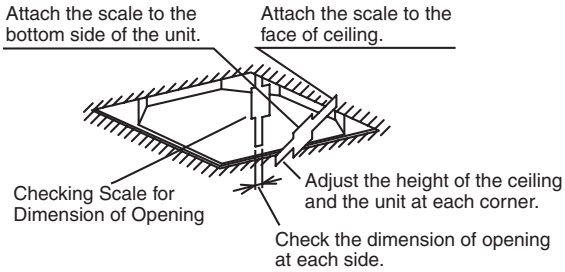

(c) For Opening of Existing Ceiling not Completed yet

When installing the indoor unit to the existing ceiling not completed, open the false ceiling surface by adjusting the outline of the pattern board (The outline dimension of the pattern board is the dimension of the opening.) Adjust the position of the indoor unit as the procedure (b) after hooking-up the indoor unit.

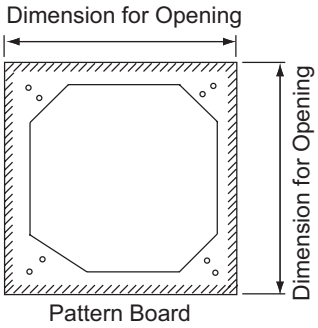

(d) Ceiling Not Completed with Panels yet

When the false ceiling is not completed yet, attach the pattern board to the indoor unit with the screw (M6), as shown in the figure. And specify the location of the opening. Adjust the position of the indoor unit as the procedure (b) after ceiling is completed with the panel.

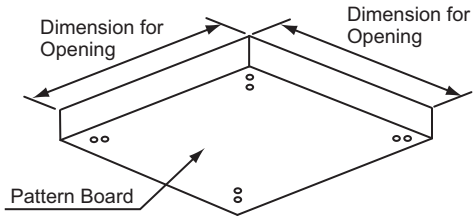

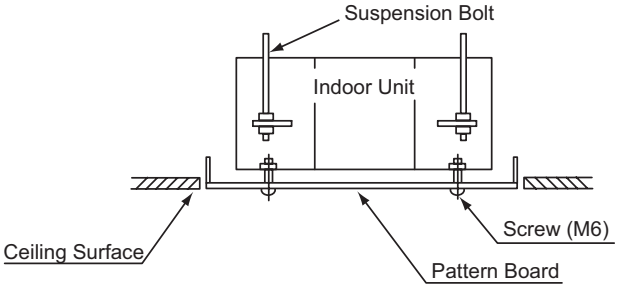

(3) Tighten the nuts of the suspension brackets after the adjustment is completed. Apply LOCK-TIGHT paint to the bolts and nuts in order to prevent them from loosening. When adjusting the space between the indoor unit and the ceiling surface, maintain the levelness of the indoor unit. If the levelness is not maintained, it may cause a malfunction of the float switch.

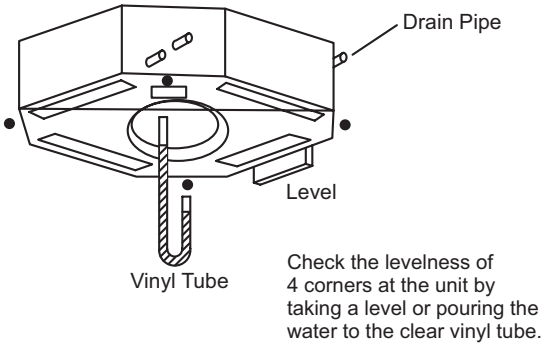

4.3.5 Installation Details for Air Panel

NOTICE

- The details of installation work for air panel shall be according to the Installation Manual for Air Panel.
- Check to ensure the connection of connectors between the indoor unit and the air panel.

(1) Check the distance between the indoor unit and the false ceiling. It is 12+5mm as shown in the figure. If not, adjust the distance by using the checking scale with maintaining the levelness of the indoor unit.

(2) Check that the fixing screws for the panel are tightened. Tighten the fixing screws for the panel until touching the stopper to the suspension bracket.

NOTE:
Pay attention to the distance between the indoor unit and the false ceiling. If it is 17mm or more, it may cause dew condensation by leaking air from the seal packing.

(3) Check the indoor unit height from the false ceiling surface.

< For Air Panels >
P-AP160NA1 and P-AP160NAE

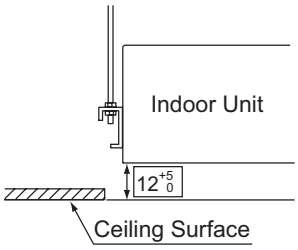

< For Air Panels with Other Optional Parts >
* Filer Box (B-160H2)
* Fresh Air Intake Kit (OACI-160K2)

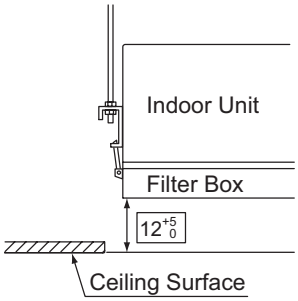

(4) Connect surely air panel (optional) connecters to the indoor unit.

The standard air panel:
P-AP160NA1 ··· 1 connector
The air panel with the motion sensor:
P-AP160NAE ··· 2 connectors

5. Refrigerant Piping Work

⚠ DANGER

Use the specified non-flammable refrigerant (R410A) to the outdoor unit in the refrigerant cycle. Do not charge material other than R410A into the unit such as hydrocarbon refrigerants (propane or etc.), oxygen, flammable gases (acetylene or etc.) or poisonous gases when installing, maintaining and moving. These flammables are extremely dangerous and may cause an explosion, a fire, and injury.

5.1 Piping Materials

(1) Prepare locally-supplied copper pipes.

(2) Select the piping size from the following table.

mm (in.)

Model	Gas Piping	Liquid Piping
RCI-1.0FSN3 RCI-1.5FSN3	ϕ12.7 (1/2)	ϕ6.35 (1/4)
RCI-2.0FSN3	ϕ15.88 (5/8)	ϕ6.35 (1/4)
RCI-2.5FSN3 RCI-3.0FSN3 RCI-4.0FSN3 RCI-5.0FSN3 RCI-6.0FSN3	ϕ15.88 (5/8)	ϕ9.52 (3/8)

(3) Select clean copper pipes. Make sure there is no dust and moisture inside. Use a pipe cutter to avoid a grind swarf generation for the pipe cutting work. (Do not use a saw or a grind stone to cut pipes.) Blow the inside of the pipes with nitrogen or dry air, to remove any dust or foreign materials before connecting pipes.

5.2 Piping Connection

(1) Position of piping connection is shown in Fig. 5.1. (Indoor Unit)

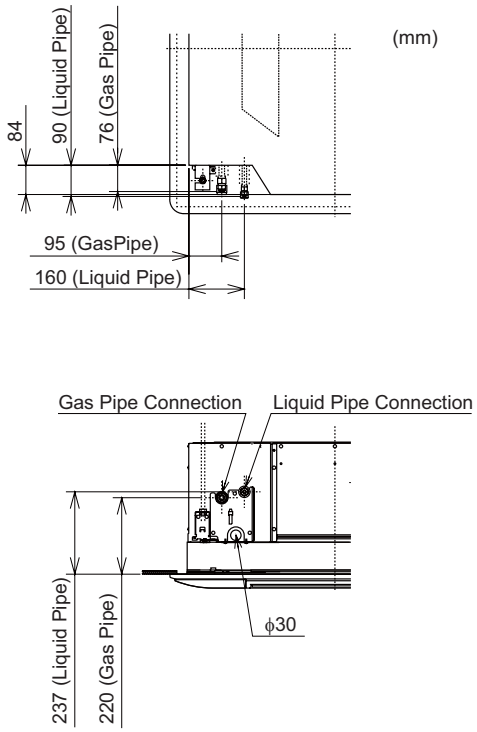

Fig. 5.1 Position of Piping Connection

(2) Perform the flaring work as shown below.

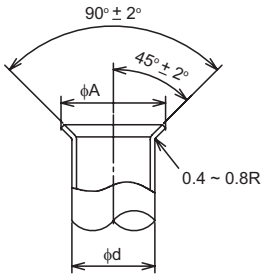

mm (in.)

Diameter (ϕd)	A +0 -0.4
6.35 (1/4)	9.1
9.52 (3/8)	13.2
12.7 (1/2)	16.6
15.88 (5/8)	19.7

(3) Apply the refrigerant oil in a thin layer to the inside of the flaring part of the pipe before tightening the flare nut. And the flare nut must be tightened using two spanners according to the tightening torque as shown in the figure below. The tightening work will be easier if tightening the flare pipe in order of the liquid pipe, the gas pipe. Check the leakage of the refrigerant after the tightening work.

* If the refrigerant oil attaches to the air panel, it may cause a crack. Pay attention not to attach.

NOTE:
Refrigerant oil is field-supplied.
[Ethereal Oil FVC50K, FVC68D
(Idemitsu Kousan Co. Ltd.)]

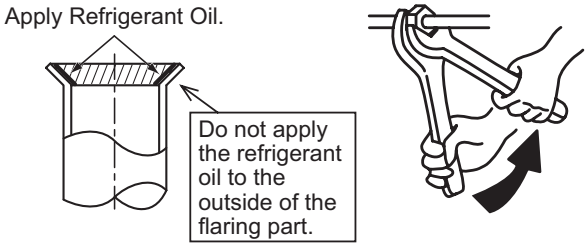

Required Tightening Torque (JIS B8607)

Pipe Size	Tightening Torque
ϕ6.35 mm (1/4)	14 - 18 (N-m)
ϕ9.52 mm (3/8)	34 - 42 (N-m)
ϕ12.7 mm (1/2)	49 - 61 (N-m)
ϕ15.88 mm (5/8)	68 - 82 (N-m)

Fig. 5.2 Tightening Work of Flare Nut

⚠ CAUTION

Tighten the flare nuts according to the specified torque. If not, it may cause the refrigerant leakage.

(4) Perform to support for earthquake resistant to the pipes in order not to damage by an external force.

(5) Do not clamp tightly the refrigerant pipe when supporting for prevention of heat stress.

(6) Do not touch the refrigerant pipes to low strength portions of walls or ceilings. If not, it may cause abnormal sound or vibration.

(7) Perform the air tight test. The air tight procedures should be performed according to “Installation & Maintenance Manual” of the outdoor unit.

(8) Insulate each flare connection without gap to prevent of dew condensation by using the accessory insulations, and insulate each refrigerant pipe also.

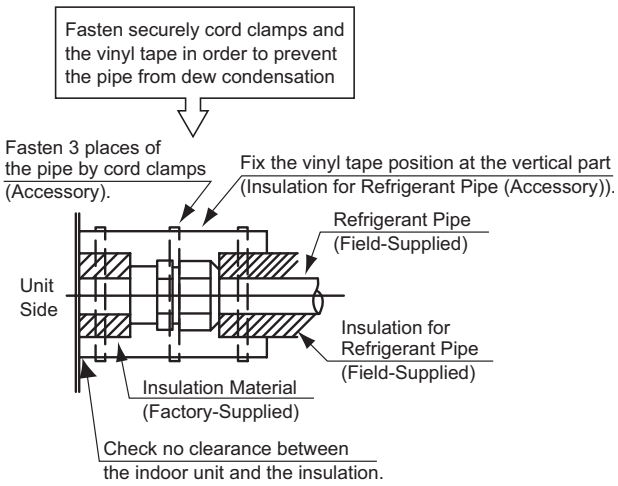

Fig. 5.3 Insulation on Pipes

(9) If using a forming agent (recommended Gupoflex) after installing the air panel, avoid touching the forming agent to the air panel. If the forming agent is touched to the air panel, it may cause the breakage and the falling of the air panel. In this case, completely wipe off the touched forming agent.

NOTICE

- Cap the end of the pipe when the pipe is to be inserted through a hole.
- Cap the end of the pipe to avoid rain or water entering.
- Do not put pipes on the ground directly without a cap or vinyl tape at the end of the pipe.

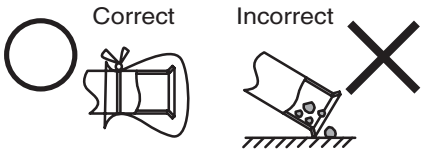

(10) Evacuation and refrigerant charging procedures should be performed according to “Installation & Maintenance Manual” of the outdoor unit.

6. Drain Piping

Perform the drain piping work and attaching the insulations before the refrigerant piping work.

⚠WARNING

Do not insert the drain pipe for the indoor unit to the drainage trench where corrosive gases occur. Poisonous gases flow into the room, so that may cause the poisoning.

NOTICE

- Do not create an upper-slope or rise for the drain piping, since drain water can flow back to the indoor unit and leakage into the room will occur when the system operation is stopped.
- Do not connect the drain pipe with sanitary or sewage piping or any other drainage piping.
- When the common drain piping is connected with other indoor units, the connected position of each indoor unit must be higher than the common piping. The pipe size of the common drain pipe must be large enough according to the unit size and number of units.
- After performing drain piping work and electrical wiring, check to ensure that water flows smoothly as in the following procedure.

(1) The position of the drain pipe connection is shown in Fig. 6.1.

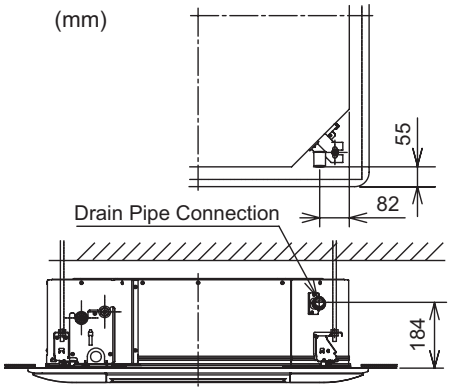

Fig. 6.1 Position of Drain Pipe Connection

(2) Prepare a polyvinyl chloride pipe with a 32mm outer diameter. (VP25 (based on JIS K6741) is recommended.)

(3) Connecting Drain Piping

(a) Connect the factory-supplied drain hose to the drain pipe connection with the polyvinyl chloride adhesive. Perform firmly cleaning the connection surface, applying the adhesive, inserting the pipe, retaining and curing according to the adhesive manufacturer information. The adhesive Eslon No.73 (Sekisui Chemical Co. Ltd) is recommended.

(b) Insert the drain hose completely. If not, or twisted, it will cause water leakage.

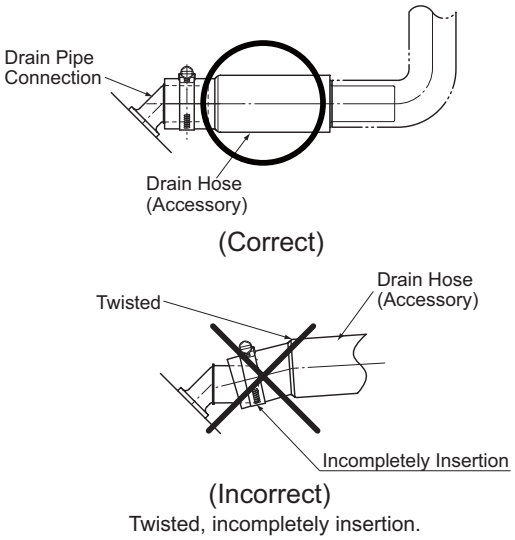

Fig. 6.2 Insertion of Drain Hose

(c) Tighten the factory-supplied hose clamp at the vinyl tape (white) of the drain hose (20mm from the end face of the drain hose) until approximately 28mm of the length from the top of the screw to the bottom of hose clamp as shown in Fig. 6.3.

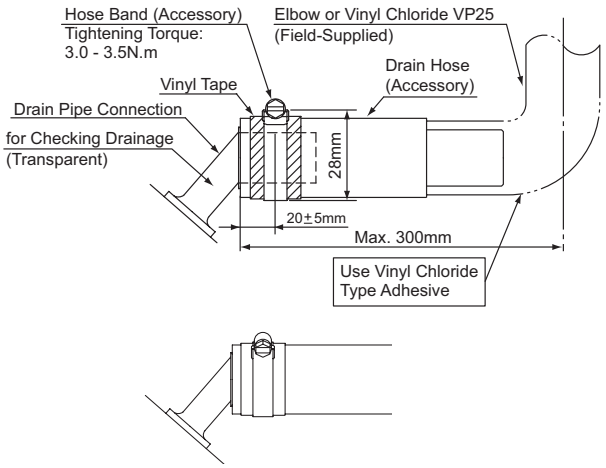

Tightening Torque: 3.0 - 3.5N.m

Fig. 6.3 Drain Hose Connection

< In Case of not Using Adhesive due to Relocating Indoor Unit in Future >

* Fully insert the drain hose to the end of the drain pipe connection as shown in Fig. 6.2. If not, or twisted, it will cause water leakage.
* Tighten the factory-supplied hose clamp at the vinyl tape (white) of the drain hose (20mm from Edge face of the drain hose) until approximately 28mm of the length from the top of the screw to the bottom of hose clamp as shown in Fig. 6.3.

NOTICE

- Use the factory-supplied drain hose and the hose clamp. Others may cause water leakage.
- Do not use the factory supplied drain hose to bend or twist. It will cause water leakage.
- Do not apply an excessive force to the drain pipe connection. It could cause a damage.

(4) Drain Piping on-site Work

(a) Connect the factory-supplied drain hose to the drain pipe connection using the polyvinyl chloride adhesive.

(b) Perform firmly cleaning the connection surface, applying the adhesive, inserting the pipe, retaining and curing according to the adhesive manufacturer information.

(c) Install the support part at the interval of 1mm to 1.5mm in order not to bend the pipe.

(d) The drain pipe must be performed with a down-slope pitch of 1/25 to 1/100.

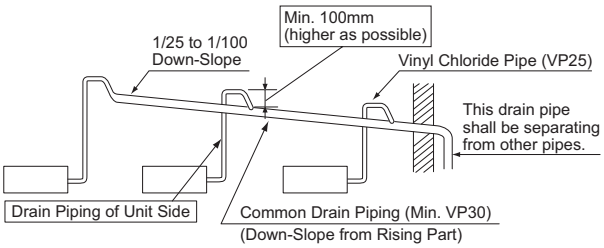

(e) The drain hose must be performed with a horizontal or upper-slope to prevent the airpocket inner the drain hose. If the airpocket occurs, the drain water will flow back to the unit and the abnormal noise and leakage to the room will occur when the unit operation is stopped.

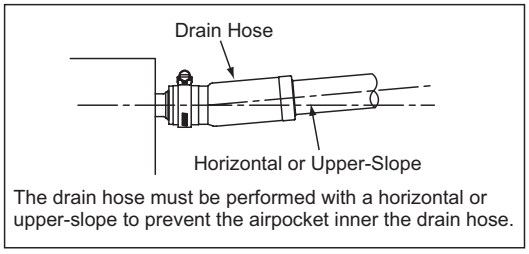

The drain hose must be performed with a horizontal or upper-slope to prevent the airpocket inner the drain hose.

(f) Lifting Drain Piping

Perform with the dimension as shown in the figure below in the case of lifting the drain pipe. The total drain piping length of a+b+c shall be within 1,100mm.

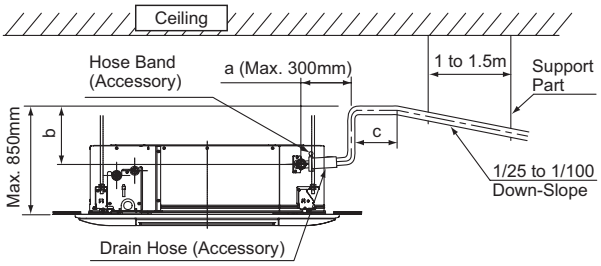

(g) Installing Common Drain Piping

* Create a down-slope for the common drain piping position from the highest rising part for the drain piping.
* The pipe size of the common drain pipe must be larger than VP30 (nominal diameter 30mm, outer diameter 38mm) according to the number of indoor units.

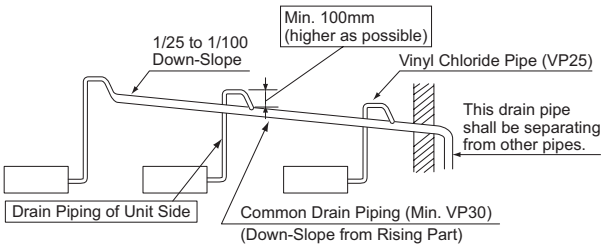

NOTICE

- Do not create a rising part for the drain piping or upper-slope. The drain water will flow back to the unit and it may cause the water leakage when the unit operation is stopped.

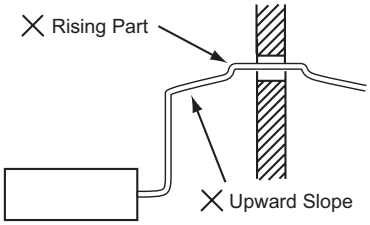

Incorrect Installation of Drain Piping

- Separate the drain piping from other pipings.

(5) Drainage and Water Leakage Check

After performing the drain piping work and the electrical wiring, check to ensure that water flows smoothly as the following procedure.

● Drainage Operation by Float Switch

The following is regular procedure to check the float switch operation.

a) Turn ON the power supply.
b) Pour 1500cc to 2000cc of water gradually into the drain pan.
c) Check to ensure that the water flows smoothly inside the transparent drain pipe connection whether no water leakage occurs.
d) If the end of the drain pipe can not be checked visually, pour more 1500cc to 2000cc of water to the drain pan. If the water overflows from the drain pan, the fault of the drainage inside the drain piping is considered. Recheck the drain piping.

● In case of pouring water through the air outlet.

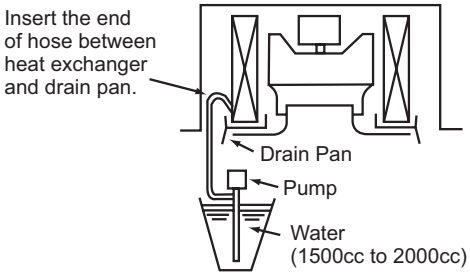

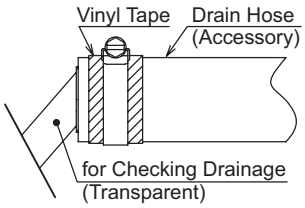

Position for Checking Drainage

WARNING

Pay attention not to splash water to the electrical parts such as the fan motor, the float switch or thermistors.

● Simplified operation of Drain-up mechanism

The following is the simplified operation procedure of the drain-up mechanism.

a) Turn OFF the power supply.
b) Disconnect the service connector (marked green).
c) Turn ON the power supply and operate the drain-up mechanism.
d) Turn OFF the power supply.
e) Reconnect the service connector. Perform surely taking the connector part when connecting or disconnecting the service connector.

NOTE:
Do not perform the procedure frequently (about 2 or 3 times).

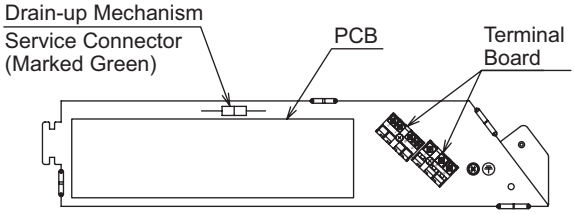

WARNING

Turn OFF the power source completely when handling the service connector. It may cause an electric shock.

(6) Insulate the drain pipe after connecting the drain hose. If not completely, dew condensation will occur.

(mm)

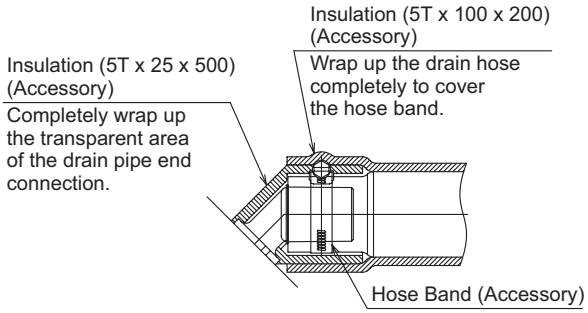

7. Electrical Wiring

⚠WARNING

- **It is recommended that the electrical wiring work be performed by authorized installers. If not, it may cause an electric shock or a fire.**
- **Perform the electrical work according to each regulation of region and "Installation & Maintenance Manual", and the dedicated electrical circuit must be utilized. If not performing the electrical wiring work completely or a capacity shortage of the power circuit, it will cause an electric shock or a fire.**
- **Utilize the specified cables for wiring between the outdoor unit and indoor units. Selecting incorrect cables will cause an electric shock or a fire.**
- **Install an ELB (Earth Leakage Breaker) in the power source. If not used, it will cause an electric shock or a fire.**
- **Turn OFF the main power switch of the indoor unit and the outdoor unit before an electrical wiring work or a periodical check is performed. If not, it will cause an electric shock or a fire.**
- **Check to ensure that the indoor fan and the outdoor fan have stopped before electrical wiring work or a periodical check is performed.**
- **Protect the wires, drain pipe, electrical parts, etc. from rats or other small animals.**
  If not protected, rats may gnaw at unprotected parts and at the worst, a fire will occur.
- **Tighten screws according to the following torque.**

  M3.5: 1.2 N-m
  M4: 1.0 to 1.3 N-m

⚠CAUTION

- **Wrap the accessory packing around the wires, and plug the wiring connection hole with the seal material to protect the product from any condensate water or insects.**
- **Tightly secure the wires with the cord clamp inside the indoor unit.**
- **Lead the wires through the knockout hole in the side cover when using conduit.**
- **Secure the cable of the remote control switch using the cord clamp inside the electrical box.**

NOTICE

The procedure of the wiring work shall be performed according to this manual and "Installation & Maintenance Manual" of the outdoor unit.

7.1 General Check

(1) Make sure that the field-selected electrical components (main power switches, circuit breakers, wires, conduit connectors and wire terminals) have been properly selected according to the electrical data given in "Technical Catalog". Make sure that the components comply with National Electrical Code (NEC).

(2) Use the shielded twist pair cable for the control cable between the outdoor unit and the indoor unit, the control cable between indoor units and the remote control switch cable of PC-ARF.

(3) Check to ensure that the power supply voltage is within ±10% of the rated voltage.

(4) Check the capacity of the electrical wires. If the power source capacity is too low, the system cannot be started due to the voltage drop.

(5) Check to ensure that the earth wire is connected.

7.2 Electrical Wiring Capacity

7.2.1 Field Minimum Wire Sizes for Power Source

- Use an ELB (Earth Leakage Breaker).
  If not used, it will cause an electric shock or a fire.
- Do not operate the system until all the check points have been cleared.
  (A) Check to ensure that the electrical resistance is more than 1 megohm, by measuring the resistance between ground and the terminal of the electrical parts. If not, do not operate the system until the electrical leakage is found and repaired.
  (B) Check to ensure that the stop valves of the outdoor unit are fully opened, and then start the system.
  (C) Check to ensure that the switch on the main power source has been ON for more than 12 hours, to warm the compressor oil by the crankcase heater.
- Pay attention to the following items while the system is running.
  (A) Do not touch any of the parts by hand at the discharge gas side, since the compressor chamber and the pipes at the discharge side are heated higher than 90°C.
  (B) DO NOT PUSH THE BUTTON OF THE MAGNETIC SWITCH(ES). It will cause a serious accident.

Model	Power Source	Maximum Current	Power Source Cable Size		Transmitting Cable Size	
			IEC 60335-1 *1	MLFC *2	IEC 60335-1 *1	MLFC *2
RCI-1.0FSN3 RCI-1.5FSN3 RCI-2.0FSN3 RCI-2.5FSN3 RCI-3.0FSN3 RCI-4.0FSN3 RCI-5.0FSN3 RCI-6.0FSN3	220-240V/1ϕ/50Hz 220V/1ϕ/60Hz	5A	0.75mm^2	0.5mm^2	0.75mm^2	0.5mm^2

NOTES:

1) Follow local codes and regulations when selecting field wires.
2) The wire sizes marked with *1 in the above table are selected at the maximum current of the unit according to the European Standard, IEC 60335-1. Use the wires which are not lighter than the ordinary tough rubber sheathed flexible cord (code designation H05RN-F) or ordinary polychloroprene sheathed flexible cord (code designation H05RN-F).
3) The wire sizes marked with *2 in the above table are selected at the maximum current of the unit according to the wire, MLFC (Flame Retardant Polyflex Wire) manufactured by Hitachi Cable Ltd., Japan.
4) Use a shielded cable for the transmitting circuit and connect it to ground.
5) In the case that power cables are connected in series, add each unit maximum current and select wires below.

Selection According to IEC 60335-1

Current i (A)	Wire Size (mm^2)
i ≤ 6	0.75
6 < i ≤ 10	1
10 < i ≤ 16	1.5
16 < i ≤ 25	2.5
25 < i ≤ 32	4
32 < i ≤ 40	6
40 < i ≤ 63	10
63 < i	*3

Selection According to MLFC (at Cable Temperature of 60°C)

Current i (A)	Wire Size (mm^2)
i ≤ 15	0.5
15 < i ≤ 18	0.75
18 < i ≤ 24	1.25
24 < i ≤ 34	2
34 < i ≤ 47	3.5
47 < i ≤ 62	5.5
62 < i ≤ 78	8
78 < i ≤ 112	14
112 < i ≤ 147	22

*3: In the case that current exceeds 63A, do not connect cables in series.

7.2.2 Details of Electrical Wiring Connection

The electrical wiring capacity of the outdoor unit should be referred according to “Installation & Maintenance Manual” of the outdoor unit. Setting Dip Switch may be required depending on the combination with the outdoor unit.

NOTE:
When installing the unit in Australia, connect the both ends of shielded twist pair cable (remote control switch cable and control cable) to the earth. (Refer to the item 7.3 (8) for details.)

● Wiring Connection (Single Indoor Unit)

< 3ϕ 380-415V/50Hz >

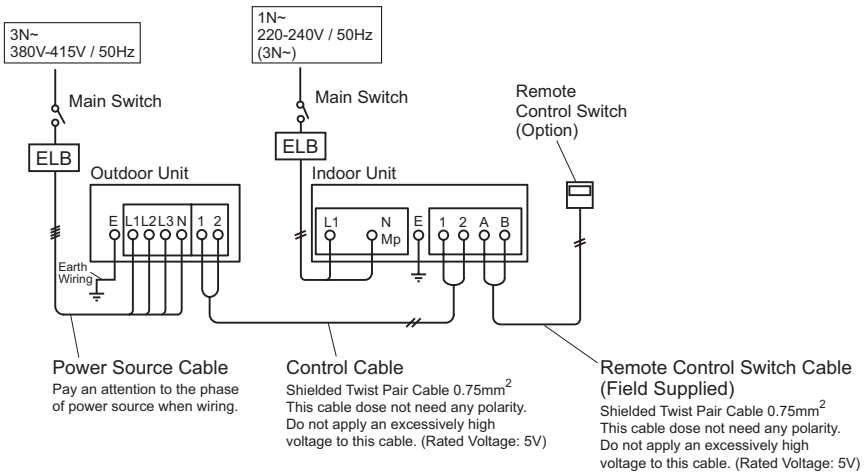

< 3ϕ 380V/60Hz >

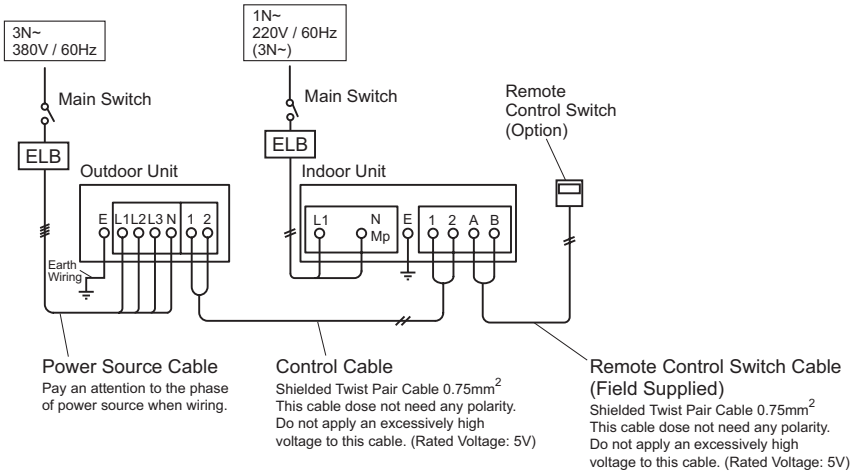

< 3ϕ 220V/60Hz >

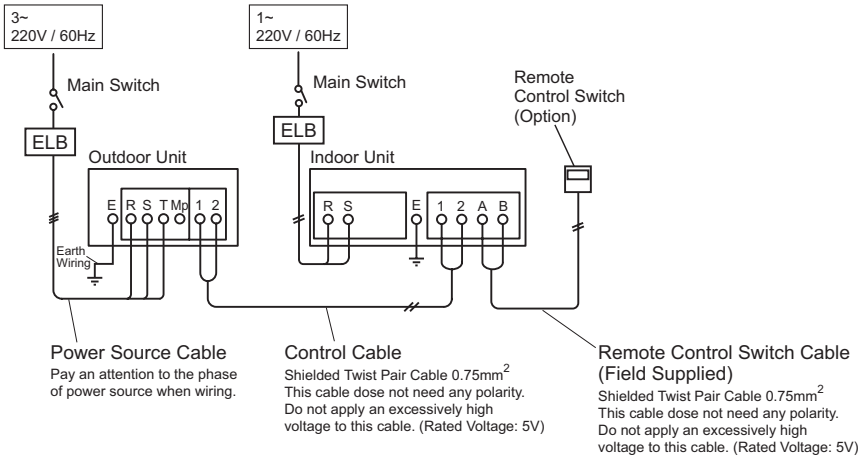

● Wiring Connection (Twin, Triple and Quad Combinations for Simultaneous Operation)

< 3ϕ 380-415V/50Hz >

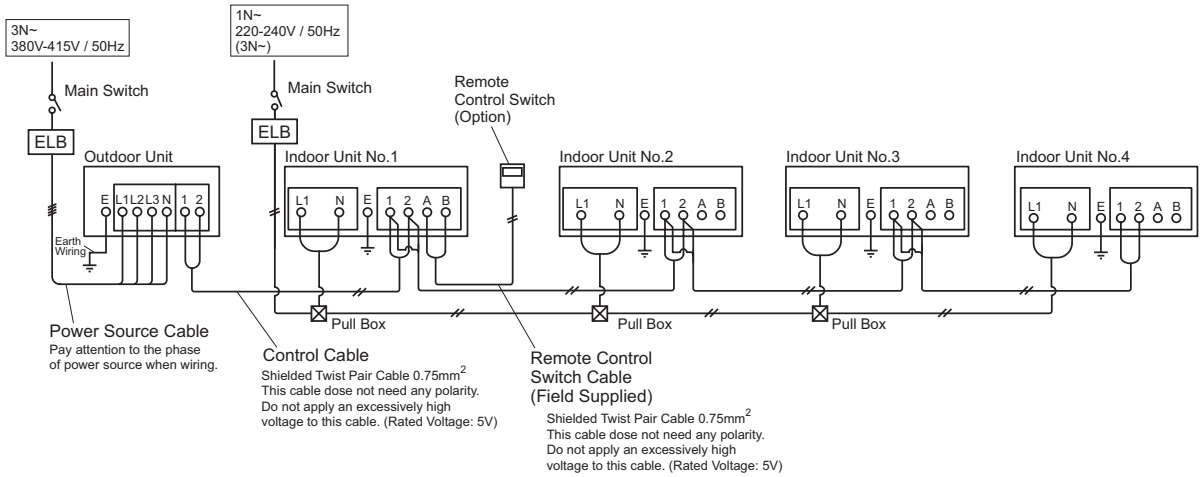

< 3ϕ 380V/60Hz >

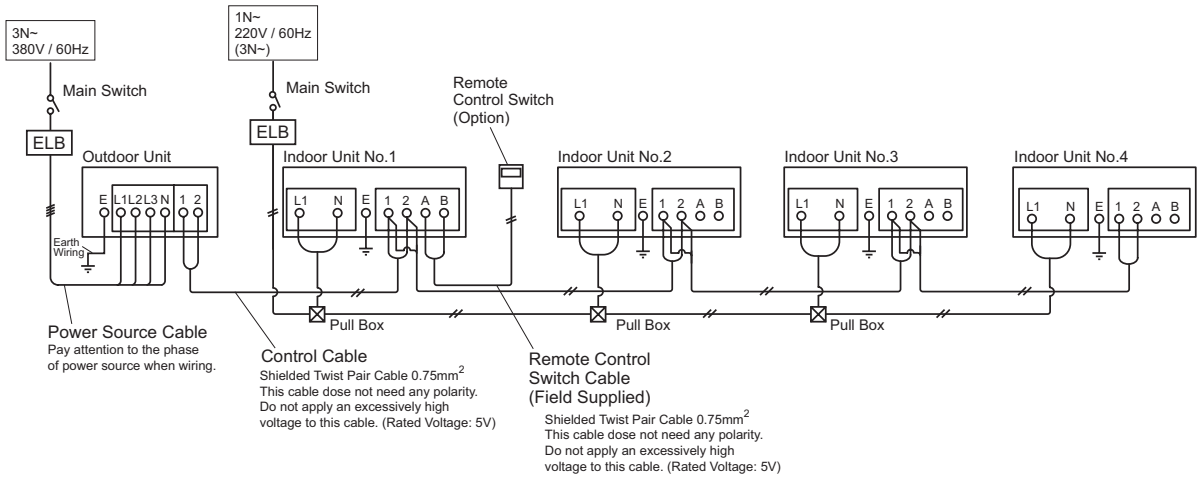

< 3ϕ 220V/60Hz >

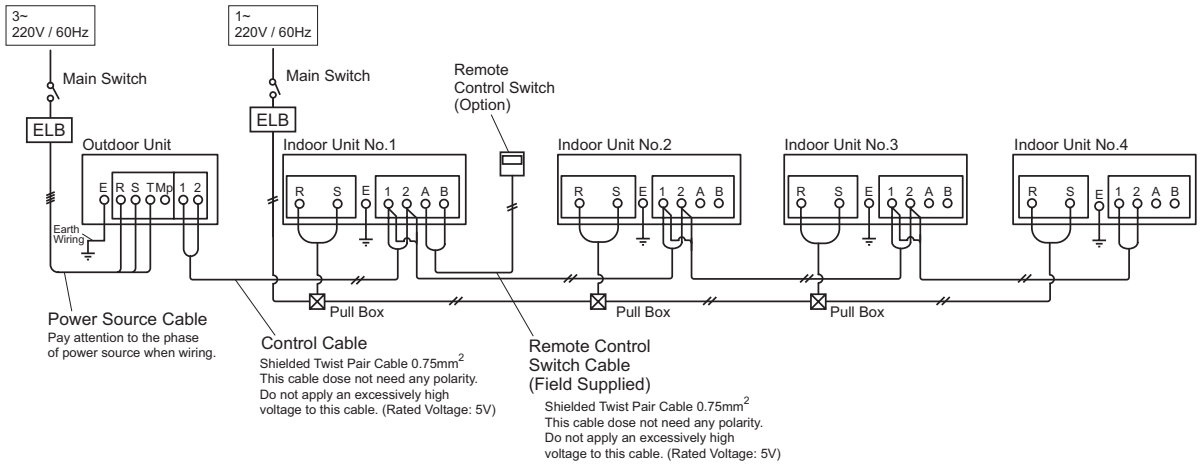

● Wiring Connection (Twin, Triple and Quad Combinations for Individual Operation)

< 3ϕ 380-415V/50Hz >

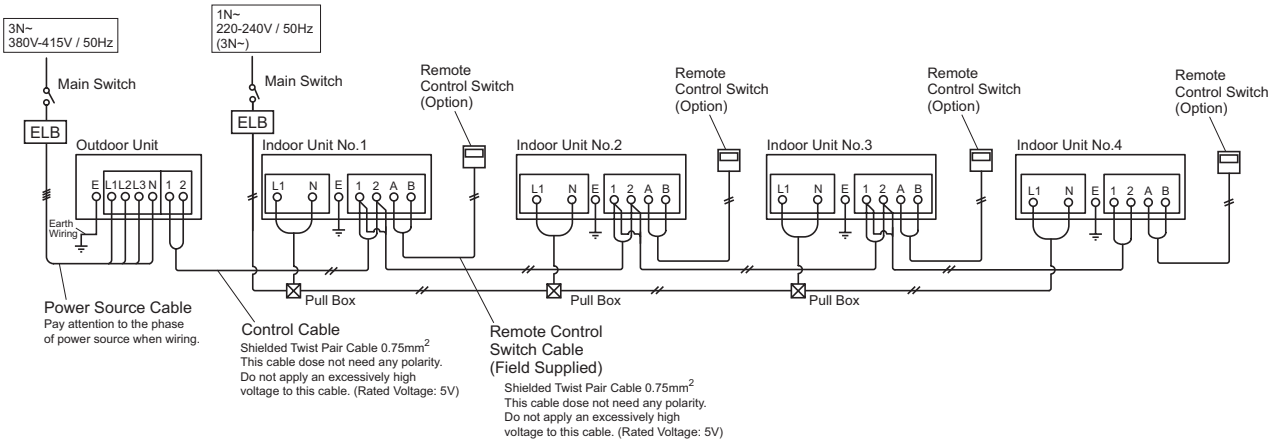

< 3ϕ 380V/60Hz >

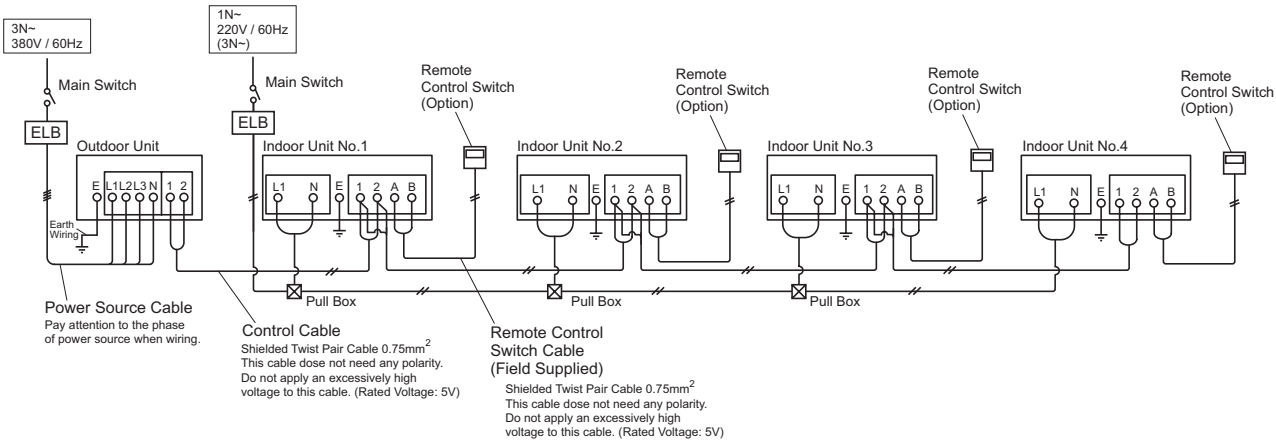

< 3ϕ 220V/60Hz >

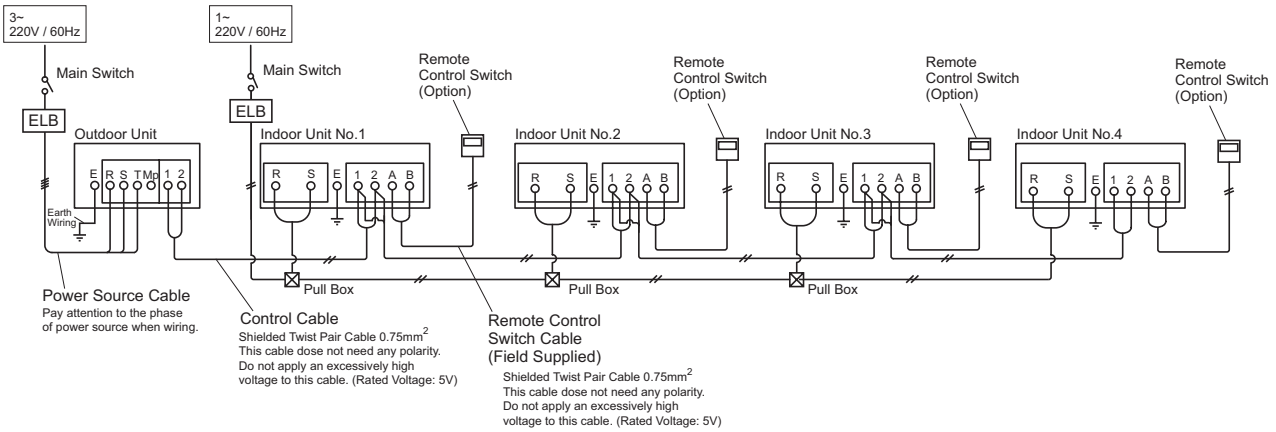

7.3 Position of Electrical Wiring Connection

⚠ WARNING

- **Tightly secure wirings to the terminal board according to the specified torque. If tightening the terminals is not completed, heat generation, an electric shock or a fire will occur at the terminal connection.**
- **Make sure that the wires are securely fixed in order not to apply an external force to the terminal connections of the wirings. If fixing is not completed, heat generation or a fire will occur.**

- The electrical wiring connection for the indoor unit is shown in the item 7.2.2. The intermediate connection between the indoor unit and the air panel should be referred to “Installation of Optional Air Panel”.
- The connections at the terminal board for the indoor unit is shown in the figure below. Check the outdoor unit for the combination before the wiring work. The screws at the terminal board should be performed according to the tightening torque as shown in the table below.

Tightening Torque for Terminals

Screw Size		Tightening Torque
TB1	M4	1.0 - 1.3 (N-m)
TB2	M3.5	1.2 (N-m)

Terminal Board for Power Source Cable TB1 (black)	Terminal Board for Control Cable TB2 (white)
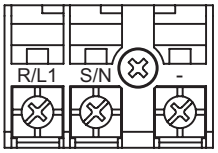	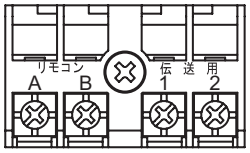

< Notice for Wiring Work of Terminal Board >

1. Attach an insulation tape or a sleeve to each terminal.
2. Maintain the distance between the electrical box and the terminals to prevent a short circuit.
3. Maintain the distance between the terminals.

(1) Connect the cable for the optional remote control switch or the optional extension cable to the terminals inside the electrical box through the connecting hole in the cabinet.

(2) Connect the power supply and the earth wires to the terminals in the electrical box.

(3) Connect the wires between the indoor unit and the outdoor unit to the terminals in the electrical box.

(4) Connect cables correctly to match the terminal No. and the mark band.

(5) Connect the transition wires between indoor units connected to the same outdoor unit.

(6) Do not connect the main power source cables to the control line (Terminals 1, 2, A and B of TB2). If connected, the printed circuit board (PCB) will be broken.

(7) Tightly clamp the wires using the cord clamp inside the electrical box.

(8) When installing the unit in Australia, connect the both ends of shielded twist pair cable (remote control switch cable and control cable) to the earth as shown bellow.

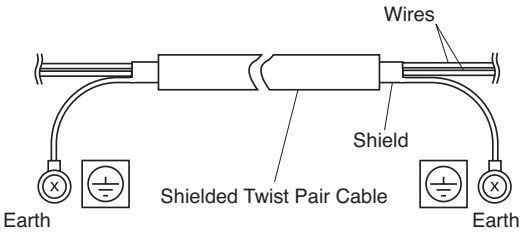

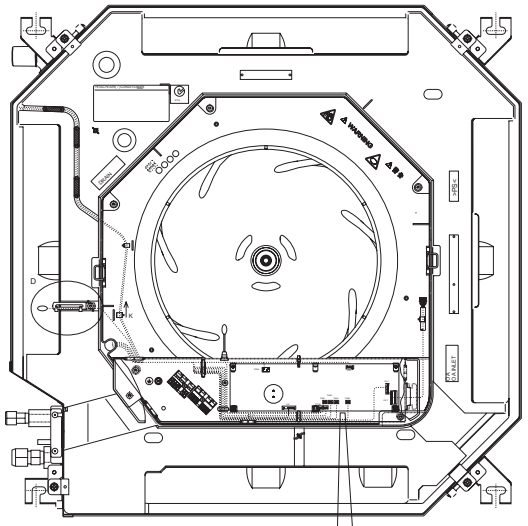

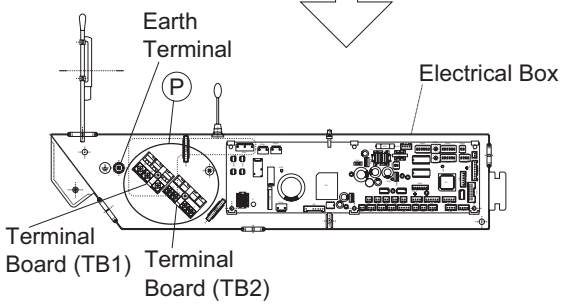

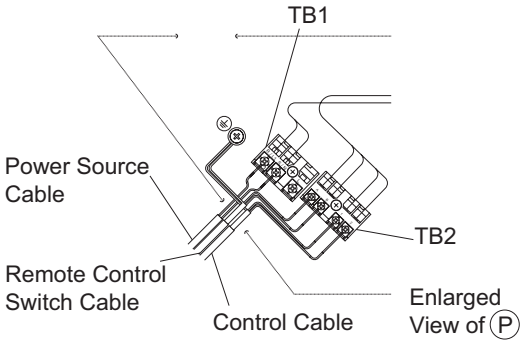

Fig. 7.1 Electrical Wiring Connection for Indoor Unit

(9) The wiring work for the indoor unit should be performed according to the electrical wiring diagram and “Installation & Maintenance Manual” of the outdoor unit.

(10) In Case that Power Source (220V / 240V) Is Applied to Control Line
If 220V / 240V is applied to the control line (Terminal 1 and 2 of TB2) due to mistake, the fuse on the PCB for the control line will blow out. In this case, perform the recovery work as shown in the below.

(a) Reconnect the wirings correctly.
(b) Set No.1 pin of DSW7 (on PCB) at ON side.

PCB is recovered from the fuse blowing out. However, if 220V / 240V is applied to the control line again, PCB will break and not be able to recover.

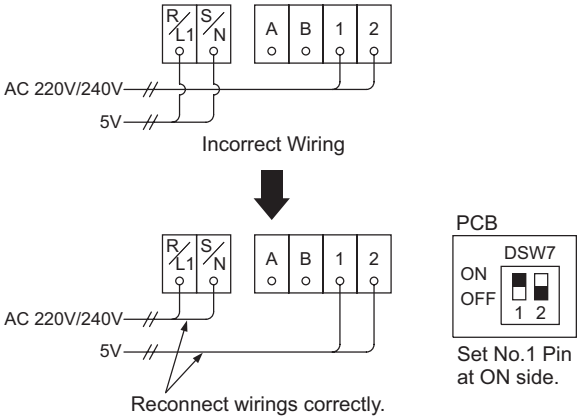

(11) Remote Control Switch Connection

(a) Installing Remote Control Switch to each Unit with Individual Operation Setting

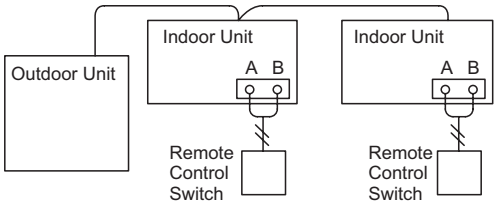

(b) Installing One Remote Control Switch with Individual Operation Setting

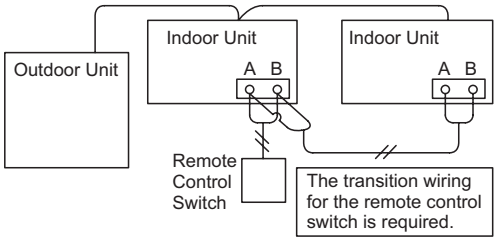

(c) Simultaneous Operation
(The indoor unit is H-LINK II model.)

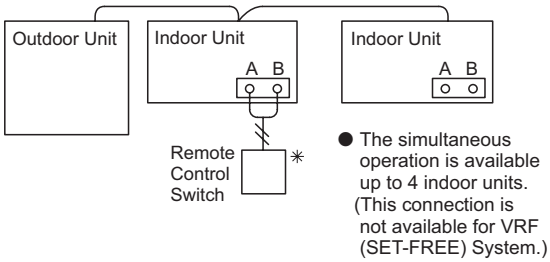

✳ This indoor unit is adopted four (4) steps of fan speed (HIGH 2, HIGH, MED and LOW). When installing this indoor unit with three (3) steps of fan speed type, connect the remote control switch to four (4) steps of fan speed type. If not, “HIGH 2” will not be indicated and can not be selected.

(d) Connecting Remote Control Switch in Case of Connecting between Refrigerant Cycles

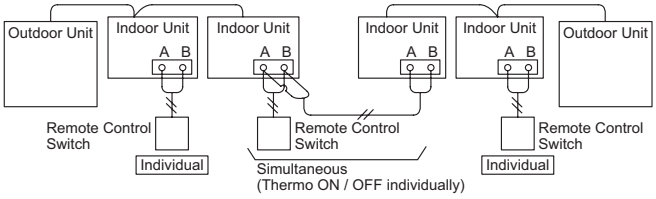

(12) Attach the ring core (black) (accessory) when installing PC-ARF remote control switch.

[Procedure]
Insert the controller cable into the ring core 2 turns as shown in the below figure before connecting to the terminal board.
Fix the cable by using the band (accessory).

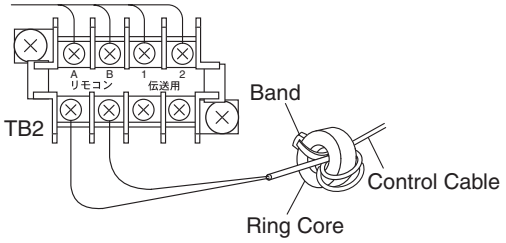

NOTICE

- The Dip Switches setting in the outdoor unit should be performed according to “Installation & Maintenance Manual” of the outdoor unit.
- Pay attention that the transition wiring for the remote control switch is required in the following cases.
  - a) The following functions are set to the sub unit which is not installed the remote control switch.
    - * "Remote ON/OFF function, 1, 2 and 3" (External Input / Output Function)
    - * "Power supply ON/OFF function, 1 and 2" (Function Selection)
    - * "Prohibiting remote control after manual stoppage" (External Input / Output Function)
    - * "Group setting by the centralized controler"
  - b) The combination of twin, triple or quad is controlled by one remote control switch.
  - c) The address of the indoor unit is changed from the remote control switch.
  - d) The multiple panels with the motion sensor are controlled by one remote control switch.

7.4 Transition Wiring for Remote Control Switch

In the twin, triple, and quad combination of indoor units, the transition wiring for the remote control switch is not required. However, when connecting indoor units without transition wiring for remote control switch, the followings are limited.

(1) The following functions are available to set only to the main unit with the remote control switch PC-ARF.

* “Remote ON/OFF function, 1 and 2"
* “Power supply ON/OFF function, 1 and 2"
* “Prohibiting operation by remote control switch”

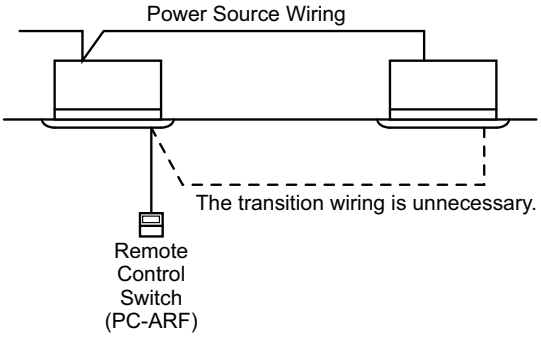

(2) The following connections are NOT available.

(a) Connection between Main Units without Transition Wiring
When the indoor units in multiple refrigerant cycles are controlled by one remote control switch, all the indoor units are required to be connected with the transition wirings.

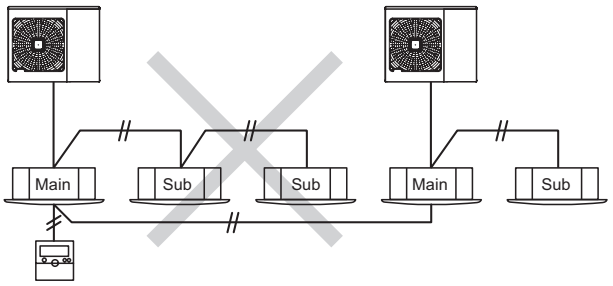

Incorrect

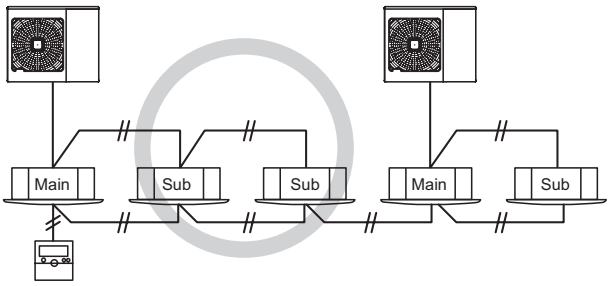

Correct

(b) Connection between Main Unit without Transition Wiring and Unit with Transition Wiring
When the indoor units in multiple refrigerant cycles are controlled by one remote control switch, all the indoor units are required to be connected with the transition wirings.

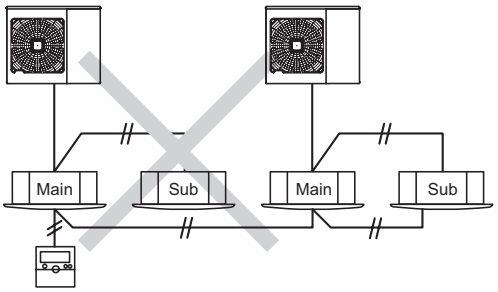

Incorrect

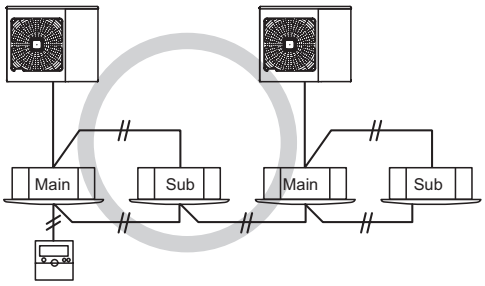

Correct

(c) Connecting Remote Control Switch to Sub unit without Transition Wiring
When the indoor units are controlled by 2 remote control switches, the sub remote control switch shall be connected to the main unit.

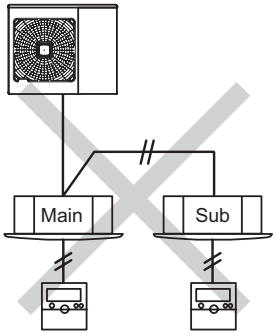

Incorrect

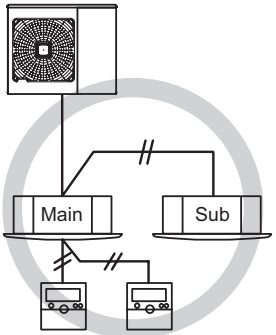

Correct

(d) Connecting to Wall Type Indoor Unit with Receiver
The transition siring is required when the wall type indoor unit (with receiver) is connected.

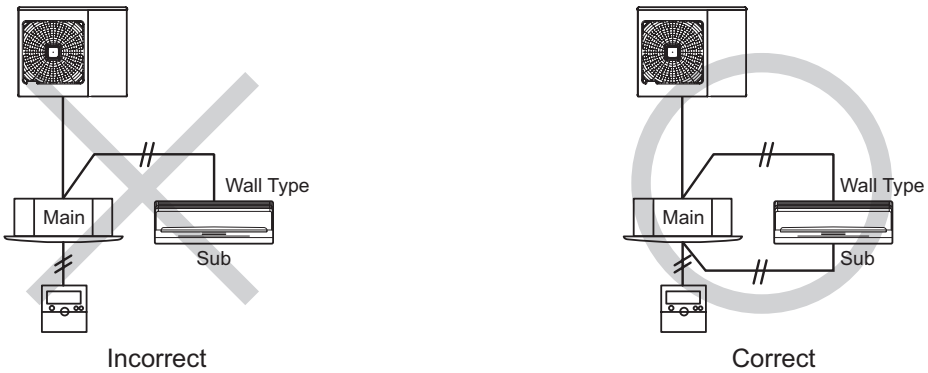

Incorrect Correct

(3) The address of indoor unit can not be changed from the remote control switch.

(4) This indoor unit is adopted four (4) steps of fan speed (HIGH 2, HIGH, MED and LOW). When it is installed with three (3) steps of fan speed type, connect the remote control switch to four (4) steps of fan speed type. If not, “HIGH 2” will not be indicated and can not be selected.
The remote control switch PC-ARF must be used.

(5) In the case of connecting the centralized controller, the followings are limited.
If they are utilized without following limitations, the operation is not run correctly.

Name	Model	Limited Item
Central Station	PSC-A64S PSC-5S	②
Centralized ON/OFF Controller	PSC-A16RS	①
Centralized Station (EZ)	PSC-A64GT	②
Centralized Station (DX)	PSC-A128WX	①
HARC70-P1	HARC70-P1	③ When the indoor unit which is not connected to the remote control switch is checked the condition on the centralized station, the indication is always “Prohibiting Operation by Remote Control Switch” for all items.
HARC-BX	HARC-BX	

NOTES:
1.The centralized controllers can not be used together.
2.“HIGH 2” is not available to be set from the centralized controller.

① No Limitation
However, for the indoor unit without remote control switch, when the condition is checked on the centralized controller, the indication is always “Prohibiting Operation by Remote Control Switch” (for all items).

② The indoor unit with remote control switch is required to be set as the main unit in the group.
If the setting is wrong, the centralized controller can not control the indoor units in the group.

③ The transition wiring is required because the centralized controller can not recognize the indoor units without remote control switch.

7.4.1 Cautions for Individual Louver Setting

(1) The individual louver setting is available up to 16 indoor units by one remote control switch. The connection more than 17 indoor units are not available.

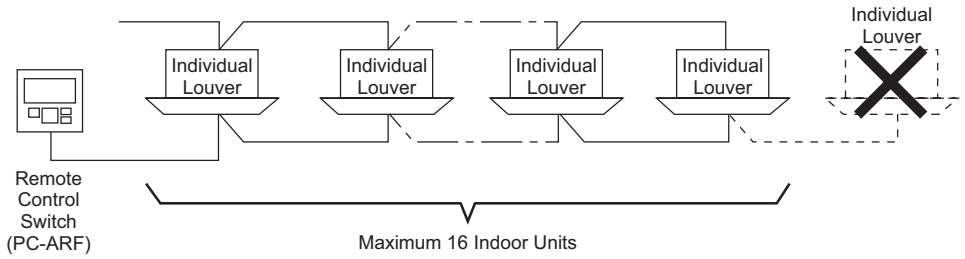

(2) The individual louver setting in the same refrigerant cycle are available up to 4 indoor units without the transition wiring for the remote control switch.

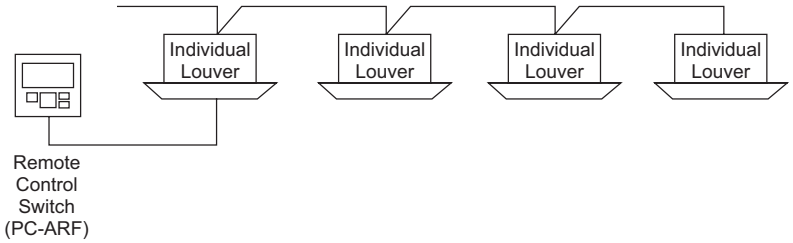

NOTE:
When the individual louver is set, the air panel shall be seen from the place of the remote control switch. In the case of connecting the multiple indoor units, pay attention to the positional relationship between remote control switch and air panel.

(3) This “Individual Louver Setting” is NOT available with 2 (two) remote control switches.

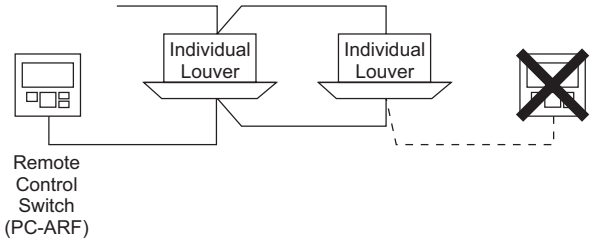

(4) The individual louver function is not for blocking the air outlet. If the air outlet is blocked, 3-Way Outlet Parts Set shall be used.

NOTE:
The air outlets can not be closed individually by the individual louver setting.

7.4.2 Cautions for Air Panel with Motion Sensor

(1) The air panel with motion sensor can be connected up to 16 indoor units by one remote control switch (PC-ARF). The air panel with motion sensor will be activated even if it is installed together with the air panel without motion sensor,

(2) When the multiple indoor units with motion sensor are controlled by one remote control switch (PC-ARF), the transition wiring for remote control switch is required to all the indoor units. If not, the indoor units with motion sensor will not be activated.

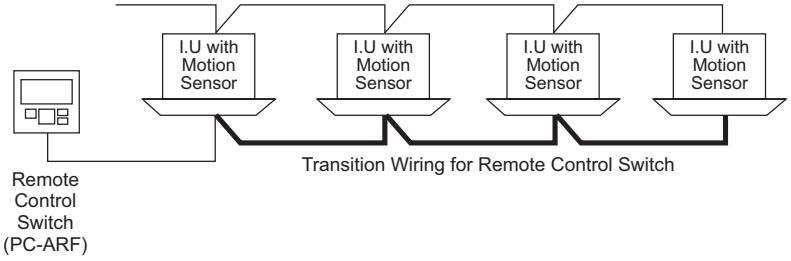

(3) In the case that 2 remote control switches are connected, the motion sensor can be set on only the main remote control switch. The sub remote control switch is for the indication only.

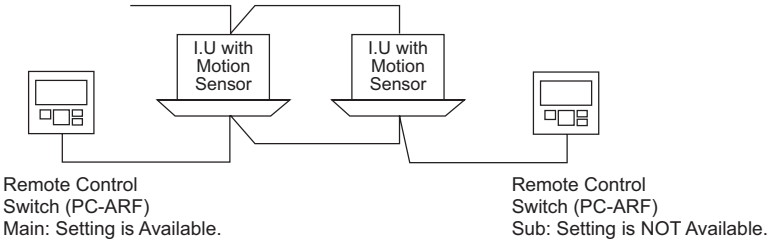

(4) The outdoor unit model shall be selected corresponding to the control for air panel with motion sensor as shown below.

< Corresponding Outdoor Units for Motion Sensor Function > (As of March 2012)

DC Inverter UTOPIA HVRNM2 Series	RAS-3HVRNM2, RAS-4HVRNM2, RAS-5HVRNM2, RAS-6HVRNM2
SET-FREE FSXN Series ✳)	RAS-8FSXN, RAS-10FSXN, RAS-12FSXN, RAS-14FSXN, RAS-16FSXN, RAS-18FSXN, RAS-20FSXN, RAS-22FSXN, RAS-24FSXN, RAS-26FSXN, RAS-28FSXN, RAS-30FSXN, RAS-32FSXN, RAS-34FSXN, RAS-36FSXN, RAS-38FSXN, RAS-40FSXN, RAS-42FSXN, RAS-44FSXN, RAS-46FSXN, RAS-48FSXN, RAS-50FSXN, RAS-52FSXN, RAS-54FSXN
SET-FREE FSN2 Series ✳)	RAS-8FSN2, RAS-10FSN2, RAS-12FSN2, RAS-14FSN2, RAS-16FSN2, RAS-18FSN2, RAS-20FSN2, RAS-22FSN2, RAS-24FSN2, RAS-26FSN2, RAS-28FSN2, RAS-30FSN2, RAS-32FSN2, RAS-34FSN2, RAS-36FSN2, RAS-38FSN2, RAS-40FSN2, RAS-42FSN2, RAS-44FSN2, RAS-46FSN2, RAS-48FSN2

✳): The productions after July 2011 are available.

(5) The motion sensor part can not be mounted to the air panel P-AP160NA1 (without motion sensor type). (The air panel with motion sensor (P-AP160NAE) shall be used.)

(6) The remote control switch PC-ARF must be utilized. Others are not available to set the motion sensor. The remote control switch PC-AR and PC-LH3A (including the receiver kit PC-ALH) can not be used to this 4-Way Cassette type indoor units.

(7) The motion sensor function is NOT corresponding the indoor unit without remote control switch.

(8) The motion sensor can not be set from the centralized stations.

(9) The air panel with motion sensor can not be used when it is connected to the same remote control switch with an indoor unit in other refrigerant cycle which is set as the simultaneous operation.

(10) The room thermostat function is not available.

(11) In the case of RAS-HVRNM2 series or SET-FREE FSN2, FSXN outdoor unit series, the indoor unit without the motion sensor and the indoor unit with the motion sensor can be mixed.
When “If absent” is set as “Stop” on the remote control switch, both indoor units will stop.

< Use Conditions and Precaution Statements >

(1) The motion sensor detects the change of the infrared light. Therefore, it may detect the moving objects such as small animals which are difference in temperature against atmosphere. Additionally, it may detect as absence in the case of staying for long time with a bit motion or a rapid motion.
DO NOT install the air panel with motion sensor (P-AP160NAE) in the following places.
It may cause misdetection, undetectable of motion or the deterioration of the motion sensor.

* Places where ambient temperature changes drastically.
* Places where excessive force or vibration is applied to the motion sensor.
* Places where static electricity or electromagnetic waves may generate.
* Places where is interference for infrared light such as glasses or mist in a detecting area.
* Places where the lens for motion sensor is exposed in high temperature and humidity for a long time.
* Places where fluid and corrosive gas exist.
* Places where direct lights such as sunlight or headlight affect the motion sensor.
* Places where hot air from a heater, etc. affects directly the motion sensor.
* Places where the air flow returns to the motion sensor by hitting obstacles such as shelf, locker, etc.
* Places where the blower devices such as ceiling fan, ventilating fan, etc. affect the air flow from the indoor unit.
* Places where weather affects directly the surface of the motion sensor.
* Places where the lens surface may smudge or be damaged such as a dusty environment.
  Pay attention that the detecting function will be decreased if the lens for motion sensor smudges.
  In this case, wipe off smudges by a cotton swab soaked alcohol (Isopropyl alcohol is recommended.) or a soft cloth.
  (When wiping off smudges on the lens for motion sensor, do not apply excessive force. If excessive force is applied, the resin lens may be damaged so that may cause malfunctions such as misdetection or undetectable of the motion.)

(2) Do not run the wiring for motion sensor and the power source wiring in parallel.

(3) The motion sensor detects the human activity. Therefore, if the human activity is small, the detecting area becomes smaller. Additionally, it may detect as absence even if some is in a room.

(4) The motion sensor may detect as human activity if the indoor unit with the motion sensor is installed near a moving object (ex. Swing operation of a heating appliance) which is difference in temperature against atmosphere.

(5) The motion sensor may detect as absence in the case that the indoor unit with the motion sensor is installed to a high ceiling (higher than 4m) even if someone is in a room.

(6) The motion sensor may detect when a person turns away from the motion sensor or the skin is not exposed much.

7.4.3 Caution for Electrical Wiring

Do not fix the power source wire and the control wire to one terminal together.
The pullbox is required when the transition wiring is required.

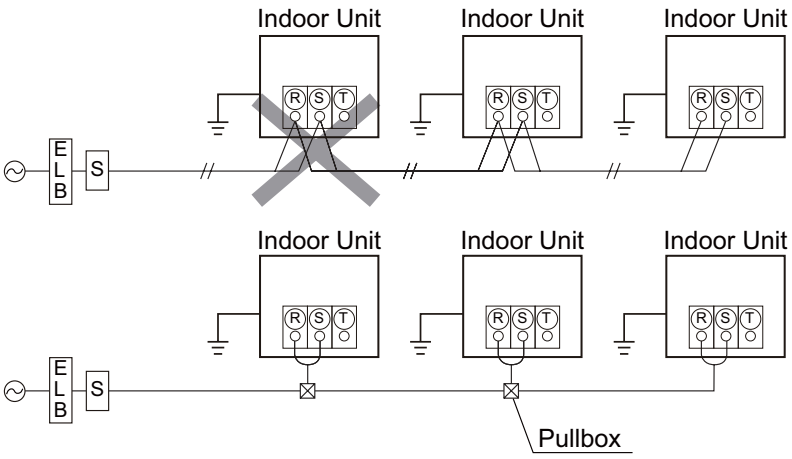

7.5 Wiring Connection

The wiring connection for the indoor unit is shown in the figure below.

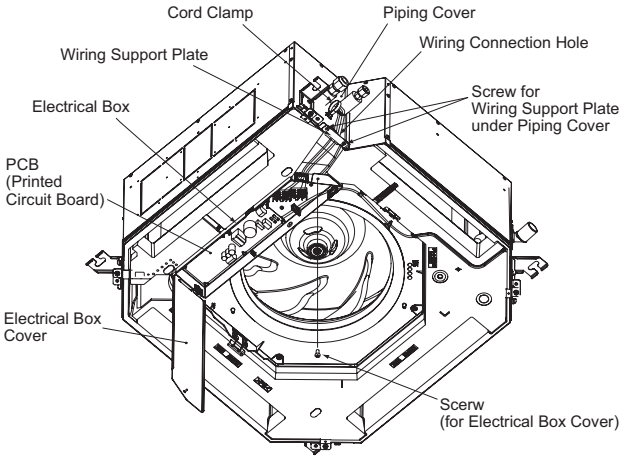

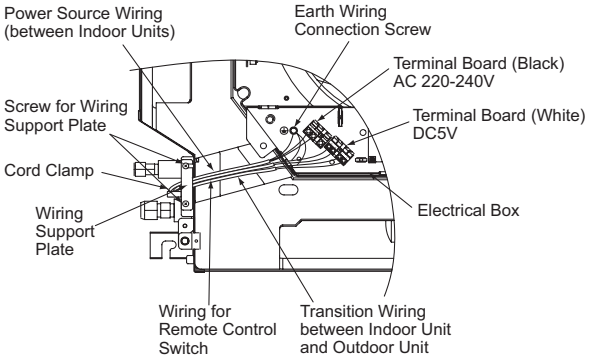

(a) Remove the electrical box cover (1 screw).
(b) Loosen two (2) screws for the wiring support plate.
(c) Fix firmly wires by the wiring support plate after the wires are installed through the wiring connection to the electrical box.
(d) Fix wires by the cord clamp of the piping cover in order not to scratch or touch wires to the edge of other parts.
(e) After the wiring is completed, pay attention not to bite wires when attaching the electrical box.
(f) Cover a gap by the insulation (5T x 50 x 200, factory-supplied) if there is a gap at the wiring connection.

⚠ WARNING

Tightly clamp wires by the cord clamp after the wiring is completed to the terminal board. If not completed, it may cause a fire by biting wires.

7.6 Dip Switches Setting

(1) Turn OFF all the power supply of the indoor unit and the outdoor unit before Dip Switch setting. If not, the setting is invalid.

(2) The positions of Dip Switches on PCB are shown in the figure below.

(3) Unit No. Setting
The indoor unit No. of all indoor units are not required. The indoor unit No. are set by the auto-address function. If the indoor unit No. setting is required, set the unit No. of all indoor units respectively and serially by following setting position. Numbering must start from “1” for every outdoor unit.

Unit No. Setting

DSW6 (Tens Digit)	RSW1 (Units Digit)	Ex.) Set at No.16 Unit
ON / OFF (1 2 3 4 5 6)	Setting Position — Set by inserting slotted screwdriver into the groove.	DSW6: ON / OFF (1 2 3 4 5 6) Set No.1 Pin at ON side
Before shipment, DSW6 and RSW1 are set to "0". Max. 64 units are available to set when all the equipment to be connected are corresponding to H-LINK II. Max. 16 units when the units corresponding/ non-corresponding to H-LINK II are combined.		RSW1 Set at "6"

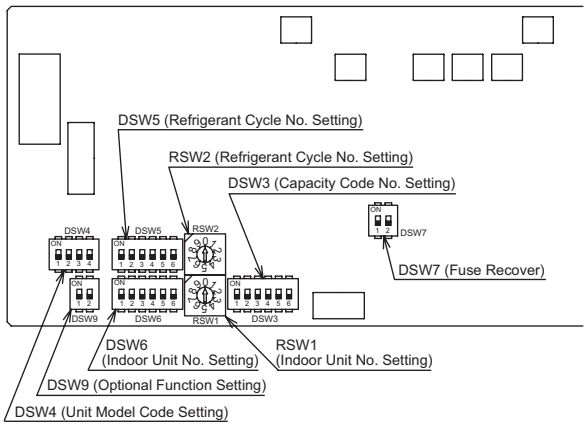

(4) Capacity Code Setting (DSW3)
No setting is required, due to setting before shipment. This switch is utilized for setting the capacity code which corresponds to the Horse Power of the indoor unit.

Horsepower	1.0	1.5	2.0	2.5
Setting Position	ON / OFF (1 2 3 4 5 6)	ON / OFF (1 2 3 4 5 6)	ON / OFF (1 2 3 4 5 6)	ON / OFF (1 2 3 4 5 6)
Horsepower	3.0	4.0	5.0	6.0
Setting Position	ON / OFF (1 2 3 4 5 6)	ON / OFF (1 2 3 4 5 6)	ON / OFF (1 2 3 4 5 6)	ON / OFF (1 2 3 4 5 6)

(5) Unit Model Code Setting (DSW4)
No setting is required.
It is for setting the model code of the indoor unit.

(6) Refrigerant Cycle No. Setting (RSW2 & DSW5)
Setting is required. Setting positions before shipment are all OFF.

Refrigerant Cycle No. Setting

DSW5 (Tens Digit)	RSW2 (Units Digit)	Ex.) Set at No.5 Cycle
1 2 3 4 5 6 ON OFF	Setting Position — Set by inserting slotted screwdriver into the groove.	DSW5: 1 2 3 4 5 6 ON OFF — Set All Pins OFF; RSW2 — Set at "5"
Before shipment, DSW5 and RSW2 are set to "0". Max. 64 cycles are available to set when all the equipment to be connected are corresponding to H-LINK II. Max. 16 cycles when the units corresponding/ non-corresponding to H-LINK II are combined.		

(7) Fuse Recover (DSW7)

* Factory Setting

* In the case of applying high voltage to the terminal 1 and 2 of TB2, the fuse (0.5A) on the PCB is cut.
In such a case, firstly reconnect the wirings correctly to TB2, and then turn on No.1 pin.

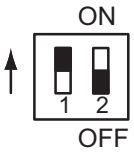

(8) Optional Function Setting (DSW9)
No setting is required.
Setting positions before shipment are all OFF.

NOTE

The "■" mark indicates position of dip switches.
Figures show setting before shipment.

NOTICE

Turn OFF all the power supply of the indoor unit and the outdoor unit before Dip Switch setting. If not, the setting is invalid.

7.7 Function Selection by Remote Control Switch

Each function can be selected from the remote control switch (PC-ARF).
The detail should be referred to "Installation & Maintenance Manual" for the remote control switch and Technical Catalog.

(1) High Speed Setting Function

This function can be set the air flow volume higher than normal air flow volume steps. It is for high height ceiling on site. Set the fan speed 1 or 2 from the function selection menu depending on a ceiling height as shown in the table below.

* If the high speed 2 setting (02) is selected from the remote control switch, the air flow volume of "HIGH 2" and "HIGH" will be equaled because the air flow volumes "HIGH 2" and "HIGH" are used maximum fan speed.

Ceiling Height		High Speed Setting Function
1.0 to 3.0HP	4.0 to 6.0HP	
Less than 2.7m	Less than 3.2m	Standard
2.7 - 3.0m	3.2 - 3.6m	High Speed 1
3.0 - 3.5m	3.6 - 4.2m	High Speed 2

(2) Circulator Function at Heating Thermo-OFF

This function maintains the fan operation by the set air flow volume at the heating Termo-OFF. It is for improvement of temperature distribution at high height ceiling site.

(3) Individual Louvers Setting (Number of Louver Outlet)

This setting is available only for the indoor unit adopting the individual louver. The number of individual louvers (louver outlet No.1 - 4) is changeable as shown in the following procedure. The number of individual louvers can be set when each of the louver outlet (louver outlet No.1 - 4) is set as the louver outlet No.1.

< Individual Louver Setting Procedure >

(1) Press and hold "☰" (menu) during the normal mode (when unit is operated).
The menu will be displayed.

(2) Select "Louver Setting" from the menu and press "OK".
The louver setting will be displayed.

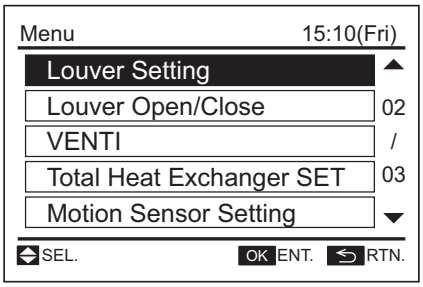

(3) Select "Louver Setting" from the louver setting and press "OK".

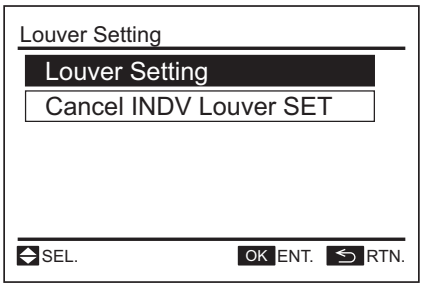

(4) Select the indoor unit to change the louver direction by pressing "△ ▽ ◁ ▷" and press "OK".
(This screen is NOT displayed when the number of indoor unit connected with the remote control switch is 1 (one). In the case, (5) will be displayed.)

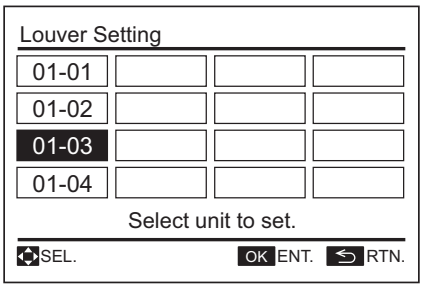

(5) Press "◁ ▷" and select the louver direction.
The selected louver is opened and the other louvers are closed.

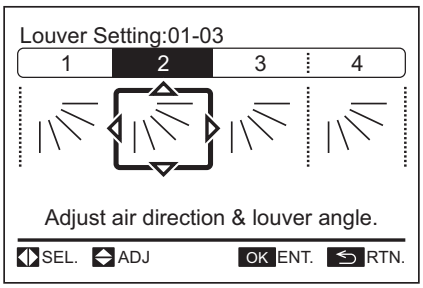

(6) Press "☰" (menu) while "?" (help) is pressed.
The confirmation screen will be displayed.

(7) Select "Yes" and press "OK". (5) will be displayed after the setting change is confirmed.
If "No" is selected and "OK" is pressed, the screen will return to (5).

* Regarding "Louver Setting", the louver selected at (5) will be set as "No.1" and the other louver No. will be changed clockwise automatically as shown in the figure.

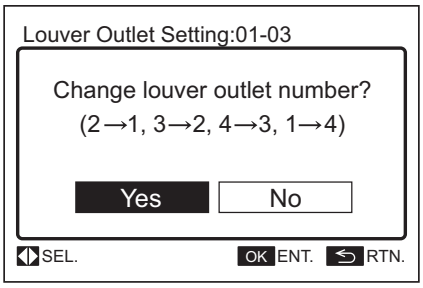

- This "Louver Setting" is NOT available when 2 (two) remote control switches are used in the same H-LINK. (including the combination with PC-ARF and PC-LH3A (wireless remote control switch))
- The individual louver setting is available up to 16 indoor units by one remote control switch.
- The individual louver setting with the same refrigerant cycle are available up to 4 indoor units without the transition wiring for the remote control switch.

8. Test Run

Test run should be performed according to "Installation & Maintenance Manual" of the outdoor unit.

⚠WARNING

- **Do not operate the system until all the check points have been cleared.**
  - **(A) Check to ensure that the electrical resistance is more than 1 megohm, by measuring the resistance between ground and the terminal of the electrical parts. If not, do not operate the system until the electrical leakage is found and repaired.**
  - **(B) Check to ensure that the stop valves of the outdoor unit are fully opened, and then start the system.**
  - **(C) Check to ensure that the main power source has been turned ON for more than 12 hours, to warm the compressor oil by the crankcase heater.**
- **Pay attention to the following items while the system is running.**
  - **(A) Do not touch any of the parts by hand at the discharge gas side, since the compressor chamber and the pipes at the discharge side are heated higher than 90°C.**
  - **(B) DO NOT PUSH THE BUTTON OF THE MAGNETIC SWITCH(ES). It will cause a serious accident.**

8.1 Before Test Run

Recheck that there is not any problems to the installation, and do not perform the test run until all the following checking points have been cleared.

(1) Check to ensure that the refrigerant piping and the transition wiring are connected to the same refrigerant cycle system. If not, it will cause an abnormal operation and breakage of instruments.

(2) Check to ensure that the electrical resistance is more than 1 megohm, by measuring the resistance between ground and the terminal of the electrical parts. If not, do NOT operate the system until the electrical leakage is found and repaired. Do not apply the high voltage to the terminals for the transmission (TB2 (1, 2, A and B)).

(3) Check to ensure that each wire is correctly connected at the power source. If incorrectly connected, the unit will not operate and the remote control switch will indicate the alarm code "05". In this case, check the phase of the primary power source according to the attached attention label on the rear side of the service cover. Then, perform the reconnection work correctly with turning OFF the power supply.

(4) Check to ensure that the main power source has been turned ON for more than 12 hours, to warm the compressor oil by the crankcase heater.

8.2 Test Run

After the installation work is completed, test run should be performed.

(1) Check to ensure that stop valves (gas and liquid) of the outdoor unit are fully opened.

(2) In the case that indoor units are connected to the VRF system, perform the test run of the indoor unit one by one sequentially and then check accordance of the refrigerant piping system and the electrical wiring system. (If the multiple indoor units are operated simultaneously, the system can not be inspected the system accordance.)

(3) Perform the test run according to the following procedure. Ensure that the test run is carried out without any problem.

(a) Press and hold "☰" (menu) and "↩" (return) simultaneously for at least 3 seconds. The test run menu will be displayed.

1) The test run menu will be displayed.

Test Run Screen

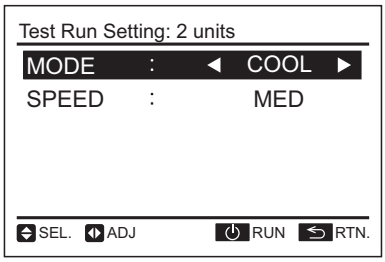

NOTE
When "00 unit" is indicated, the auto-address function may be performing. Cancel "Test Run" mode and set it again.

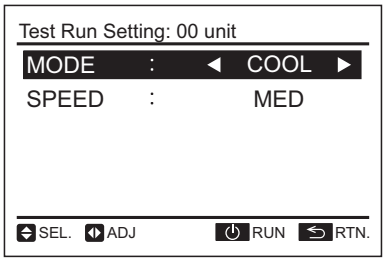

2) The total number of the indoor units connected is indicated on the LCD (Liquid crystal display). The case of the twin combination (one (1) set with two (2) indoor units) is indicated “2 units”, and the triple combination (one (1) set with three (3) indoor units) is indicated “3 units”.

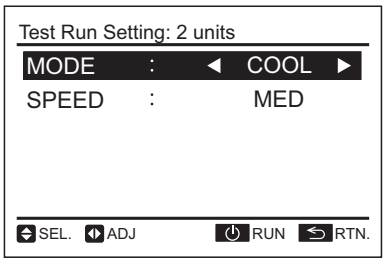

3) If the indicated number is not equal to the actual connected number of indoor units, the auto-address function is not performed correctly due to incorrect wiring, electric noise, etc. Turn OFF the power supply, and correct the wiring after checking the following points; (Do not repeat turning ON and OFF within 10 seconds.)
   * Power Supply for Indoor Unit is Not Turned ON or Incorrect Wiring.
   * Incorrect Connection of Connecting Cable between Indoor Units or Incorrect Connection of Controller Cable
   * Incorrect Setting of Rotary Switch and Dip Switch (The setting is overlapped.) on the Indoor Units PCB
4) Press “⏻” (run/stop) to start the test run.
5) Press “△ ▽ ◁ ▷” and set each item.

(b) Press “⏻” (run/stop).
Start the test run when indicating the air flow volume “HIGH” (default setting) and light the operation lamp. At this time, 2-hour OFF timer will be set automatically.

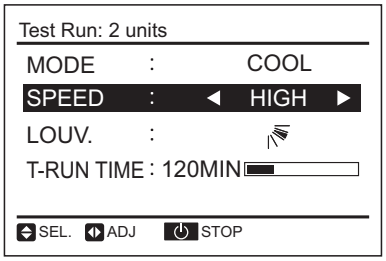

(c) Press “△” or “▽”, select “LOUV.” and select “ ” (auto swing) by pressing “◁” or “▷”. The auto swing operation will be started. Check the operating sound at the louvers. If abnormal sound is generated from louvers, it may be a deformation of the air panel due to incorrect installing. In this case, install the air panel again without a deformation. If abnormal sound is not generated, press “◁” or “▷” again to stop the auto swing operation.

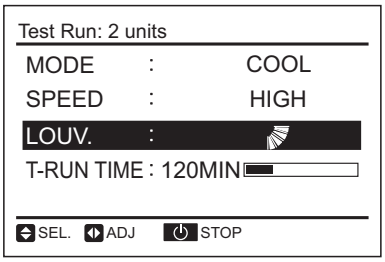

The louver indication will be changed as follow.

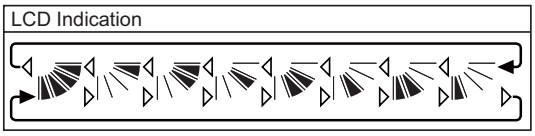

(d) Check to ensure that the motion sensor is operated correctly as following procedures (in the case of the air panel with the motion sensor).
   1) Press and hold “☰” (menu) and “?” (help) simultaneously for at least 3 seconds during the test run mode. The check menu screen “A” is displayed.

“A”

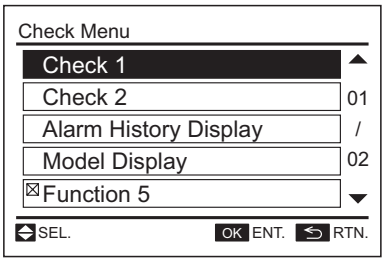

2) Select “Check 1” at the check menu and press “OK”. (screen “B” will be displayed.)
(This screen is NOT displayed when the number of indoor unit connected with the remote control switch is 1(one). In this case, screen “C” will be displayed.)

“B”

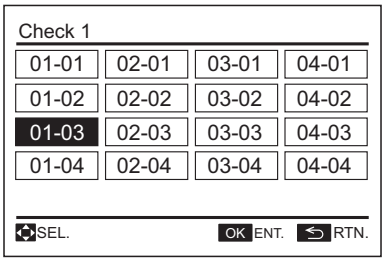

3) Select the indoor unit by pressing “△ ▽ ◁ ▷” and press “OK”. The check data screen “C” will be displayed.

“C”

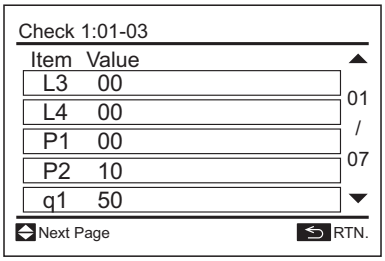

4) Press “△ ▽” to change the screen until indicating the check screen “q1”.
5) Perform the motion detection (waving a hand, etc) under the motion sensor of the indoor unit selected with for approx. 10 to 15 seconds.
6) Check the value of “q1” after 30*1 seconds from starting the motion detection at item 5). The detecting information of the motion sensor against the motion detection is indicated with the range of 0% to 100%.

*1: The transmission between the indoor unit and the remote control switch is 30 seconds cycle. The timing of the motion detection and the detected information display is shown in the figure below.

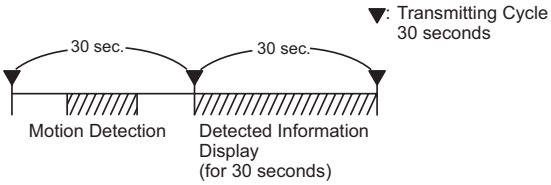

7) Check that the value of “q1” is neither 0% nor 100%.
If the value is indicated 0% or 100%, reperform the procedure from item 5).
If the same value is indicated again, it may be a malfunction of the motion sensor.
8) Press “⮌” (return) and return to the display.

(e) The temperature detections by the thermistors are invalid though the protection devices are valid during the test run.

(f) Multi-Split System:
According to the label “Checking of Outdoor Unit by 7-Segment Display on PCB1” attached to the rear side of the front cover of the outdoor unit, check temperature, pressure and the operation frequency, and connected indoor unit numbers by 7-segment displays.

(g) To finish the test run, press “⏻” (run/stop) again or pass over the set test run time. When changing the test run time, press “△” or “▽” to select “T-RUN TIME”. Then, set the test run time (30 to 600 minutes) by pressing “◁” or “▷”.

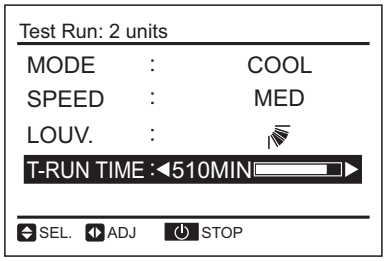

- The run indicator on the remote control switch flashes when some abnormalities such as protection devices activated, etc occur during the test run. In addition, the alarm code, the unit model code and the unit model will be displayed as shown in the figure below. If flashing RUN indicator for 2 seconds, it may be a failure in the transmission between the indoor unit and the remote control switch (loosening of connector, disconnecting wiring or breaking wire, etc). In this case, Check the alarm (abnormality) code table shown in the next page and perform for troubleshooting. Consult to authorized service engineers if abnormality can not be recovered.

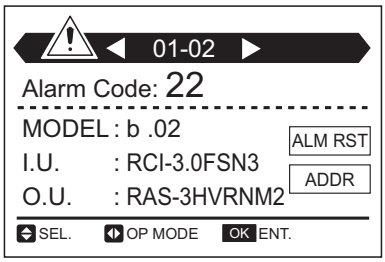

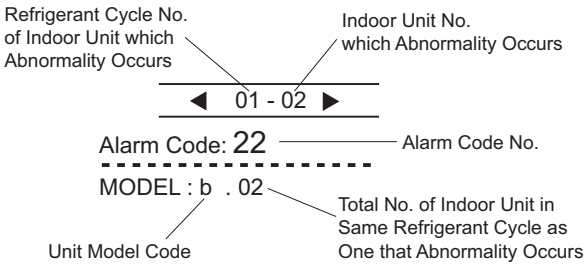

< Unit Model Code >

The relation between the unit model code and the unit model is shown in the table below.

Indication	Unit Model
F	Multi-Split (Heat Pump Operation/Heat Recovery)
b	DC Inverter UTOPIA
E	Except Above Models

Alarm (Abnormality) Code Table

Code No.	Category	Content of Abnormality	Leading Cause
01	Indoor Unit	Activation of Protection Device (Float Switch)	Activation of Float Switch (High Water Level in Drain Pan, Abnormality of Piping)
02	Outdoor Unit	Activation of Protection Device (except Alarm Code: 41, 42)	High Pressure Cut (R410A: 4.15MPa), Fan Motor Locking for Outdoor at Cooling Operation
03	Transmission	Abnormality between Indoor and Outdoor	Incorrect Wiring, Loose Terminals, Disconnect Wire, Blowout of Fuse
04-09	Abnormality of Outdoor Unit (Refer to "Installation & Maintenance Manual" of Outdoor Unit)		
11	Sensor on Indoor Unit	Inlet Air Thermister	Loosening of Connector, Disconnecting Wiring, Breaking Wire
12		Outlet Air Thermister	
13		Freeze Protection Thermister	
14		Gas Piping Thermister	
19	Fan Motor	Abnormality of Indoor Fan	Fan Motor Locking, Activation of Motor Protection Control for Indoor Fan
20-29	Abnormality of Outdoor Unit (Refer to "Installation & Maintenance Manual" of Outdoor Unit)		
31	System	Incorrect Capacity Setting of Outdoor Unit and Indoor Unit	Incorrect Capacity Code Setting of Combination Excessive or Insufficient Total Indoor Unit Capacity Code
32		Incorrect Setting of Other Indoor Unit Number	Abnormality of Other Indoor Unit in Same Refrigerant Cycle (Failure of Power Source, Abnormality of PCB)
35		Incorrect Setting of Indoor Unit No.	Duplication of Indoor Unit No. in Same Refrigerant Group
36		Incorrect of Indoor Unit Combination	Indoor Unit is Designed for Other Refrigerant (R22 or R407C).
38-59	Abnormality of Outdoor Unit (Refer to "Installation & Maintenance Manual" of Outdoor Unit)		
b0	System	Incorrect Setting of Unit Model	No Setting of Unit Model, Incorrect Setting of Unit Model
b1		Incorrect Setting of Unit and Refrigerant Cycle No.	Unit No. or Refrigerant Cycle ≥ 64
EE	Compressor	Compressor Protection Alarm	This alarm code appears when the alarms such as damaged to the compressor occur three times within 6 hours.

- The indication of the alarm code “EE” means serious abnormality to burn out the compressor
- In the case of the incorrect transmission wiring between indoor units for the twin and the triple combination, the following failure will occur during the test run. Recheck the connection of the transmission between indoor units and reconnect wirings correctly.

  Failure: The transmission error is NOT indicated on the remote control switch. No.1 indoor unit will be operated. However, other indoor units (No.2 and No.3) will NOT be operated.

Refer to “Installation & Maintenance Manual” of the outdoor unit connected to the indoor unit.

(4) for UTOPIA Series: In the case of the twin, triple and quad combination, check the air flow temperature of each indoor unit. If there is the large different air flow temperature between the main unit and sub unit(s) (cooling: approx. more than 10deg, heating: approx. more than 20deg.), it may be the failure of the refrigerant piping work. Thus, recheck the refrigerant piping.

NOTICE

Do NOT operate the air conditioning to check the electrical wiring, etc until the preparation of the test run is completed.

9. Safety and Control Device Setting

Indoor Unit

Model			RCI-1.0FSN3, RCI-1.5FSN3, RCI-2.0FSN3, RCI-2.5FSN3, RCI-3.0FSN3	RCI-4.0FSN3, RCI-5.0FSN3, RCI-6.0FSN3
For Evaporator Fan Motor				
Thermostat	Cut-Out	°C	100 ±4	100 $^{+15}_{-10}$
	Cut-In	°C	90 ±4	95 $^{+15}_{-10}$
For Control Circuit				
Fuse				
Capacity		A	5	
Freeze Protection				
Thermostat	Cut-Out	°C	0	
	Cut-In	°C	11	
Thermostat				
Differential		°C	2	

All the installation work of the air conditioning is completed.
Deliver and describe to keep this “Installation & Maintenance Manual” to a user.

HITACHI
Inspire the Next

Installation Manual

For Air Panel

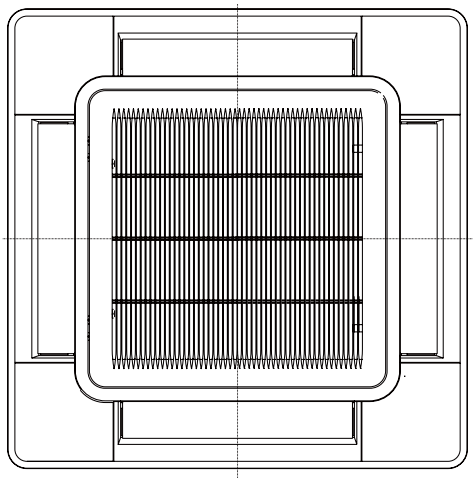

Model: P-AP160NA1
P-AP160NAE

IMPORTANT:

READ AND UNDERSTAND THIS MANUAL BEFORE USING THIS AIR PANEL. KEEP THIS MANUAL FOR FUTURE REFERENCE.

317B43809A

IMPORTANT NOTICE

- The standard utilization of this air panel is explained in these instructions.
  Improper operation, or operation not made in accordance with these instructions, can result in unsatisfactory operation and/or dangerous conditions. In such cases, the warranty does not apply.
- HITACHI's liability shall not cover defects arising from any alteration performed by a customer.
- All information in this manual is based on the latest product information available at the time of approval for printing. HITACHI reserves the right to make changes at any time without notice and without incurring any obligation.
- No part of this manual may be reproduced without written permission.
- Perform the test run whether there is abnormality or not after the installation work is completed.
  The usage and the maintenance should be explained to a user according to "Installation & Maintenance Manual" of the indoor unit. Describe to keep this installation manual also.
- This product is designed for standard air conditioning only.
  DO NOT use this product for specific purposes, such as restoring foods, animals & plants, precision devices, art objects, etc.
- DO NOT install the unit in the following places. It causes failure to the unit in many cases.
  * Places where oil (including machinery oil) mist and steam drifts.
  * Places where a lots of sulfide gas drifts such as in hot spring.
  * Places where inflammable gas may generate or flow.
  * Places where air contains high salt contents as coast regions.
  * Places where with atmosphere of acidity or alkalinity.
- Pay attention to the following points when the unit is installed in a hospital or other facilities where electromagnetic wave generates from medical equipment.
  * Do not install the unit in the place where the electromagnetic wave is directly radiated to the electrical box, remote control switch cable or remote control switch.
  * Install the unit at least 3 meters away from electromagnetic wave such as a radio.
- DO NOT install the unit in the place where the air flow directly catches to animals or plants.
  It could be the cause of adverse affect to animals or plants.
- DO NOT install the air panel with motion sensor (P-AP160NAE) in the following places.
  It may cause misdetection, undetectable of motion or the deterioration of the motion sensor.
  * Places where ambient temperature changes drastically.
  * Places where excessive force or vibration is applied to the motion sensor.
  * Places where static electricity or electromagnetic waves may generate.
  * Places where is interference for infrared light such as glasses or mist in a detecting area.
  * Places where the lens for motion sensor is exposed in high temperature and humidity for a long time.
  * Places where fluid and corrosive gas exist.
  * Places where direct lights such as sunlight or headlight affect the motion sensor.
  * Places where hot air from a heater, etc. affects directly the motion sensor.
  * Places where the air flow returns to the motion sensor by hitting obstacles such as shelf, locker, etc.
  * Places where the blower devices such as ceiling fan, ventilating fan, etc. affect the air flow from the indoor unit.
  * Places where weather affects directly the surface of the motion sensor.
  * Places where the lens surface may smudge or be damaged such as a dusty environment.
    Pay attention that the detecting function will be decreased if the lens for motion sensor smudges.
    In this case, wipe off smudges by a cotton swab soaked alcohol (Isopropyl alcohol is recommended.) or a soft cloth.
    (When wiping off smudges on the lens for motion sensor, do not apply excessive force. If excessive force is applied, the resin lens may be damaged so that may cause malfunctions such as misdetection or undetectable of the motion.)

SAFETY SUMMARY

< Signal Words>

- The following signal words are used to identify levels of hazard seriousness.
  Definitions for identifying hazard levels are provided below with their respective signal words.

⚠WARNING : WARNING indicates a hazardous situation which, if not avoided, could result in death or serious injury.

⚠CAUTION : CAUTION, used with the safety alert symbol, indicates a hazardous situation which, if not avoided, could result in minor or moderate injury.

NOTICE : NOTICE is used to address practices not related to personal injury.

NOTE : NOTE is useful information for operation and/or maintenance.

⚠WARNING

- Perform securely the installation work referring to this installation manual.
  If the installation is not completed, it may cause dew condensation by air leakage, electric shock, a fire or injury by falling down the air panel.
- DO NOT install the air panel where the flammable gases may generate or enter.
  It may cause a fire.
- DO NOT put any material on the products. DO NOT step on the products.
  It may cause injury due to falling down.
- Avoid touching a forming agent to the air panel if using the forming agent after installing the air panel.
  If the forming agent is touched to the air panel, it may cause a breakage and the falling down the air panel.
- Perform securely the electrical wiring work.
  If the electrical work is not completed, heat generation at the connection, a fire or an electric shock may occur.
- Make sure that the electrical wires are securely fixed in order not to apply an external force to the terminal connections of the wirings. If fixing is not completed, it may cause heat generation or a fire.

⚠CAUTION

- Pay attention to perform the installation work at high-place using a stepladder, etc.

NOTICE

- DO NOT move the louver by hand. If moved, the louver mechanism will be damaged.
  In addition, do not apply an excessive force to the air outlet part to prevent the breakage.
- DO NOT run the relay wiring for motion sensor at the corner pocket cover and 220-240V of the power source wires in parallel. It may cause malfunction of motion sensor by noise, etc. (for P-AP160NAE).

CHECKING PRODUCT RECEIVED

- Upon receiving this product, inspect it for any shipping damage.
  Claims for damage, either apparent or concealed, should be filed immediately with the shipping company.
- Check the model number and accessories to determine if they are correct.

1. Applicable Model

This air panel is applicable to the following indoor unit model.

Air Panel	Indoor Unit Model
P-AP160NA1 (without Motion Sensor)	RCI-1.0FSN3 to 6.0FSN3
P-AP160NAE (with Motion Sensor)	

2. Transportation and Handling

1) Transport the air panel without unpacking as close to the installation location.
2) Mount the air panel as soon as possible after unpacking.
3) When the air panel is placed on the floor after unpacking, place it with the rear side downward (the surface to fit the indoor unit body) on an insulation material, etc. However, do not leave the air panel on the floor for long time. It may cause air leakage due to scratch the seal packing.
   In addition, if the air panel is placed with the surface downward, the louver mechanism may be damaged due to touch the louver to the floor, etc.
4) Do not move the louver by hand.
   If moved, the louver mechanism will be damaged.

3. Before Installation

1) Check to ensure that the following accessories are packed with the air panel.

Name	Q'ty		Purpose
	P-AP160NA1	P-AP160NAE	
Long Screw (M6 Cross Screw)	4	4	For Fixing Air Panel
Relay Wire 3Poles 5Poles	-	1	For Motion Sensor
Wiring Cover	-	1	For Protection of Relay Connector
Plastic Band	-	3	For Clamping Wiring Cover and Relay Connector

If any of these accessories are not packed in the packing, please contact your contractor.

2) Attachment for Corner Pocket Cover with Motion Sensor (For P-AP160NAE)

(a) The corner pocket cover with motion sensor can be attached to any of corners (4 directions, ①, ②, ③ and ④).
Determine the attaching place as user's request.

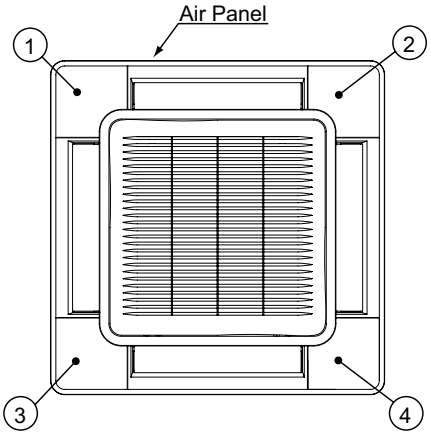

(b) Remove the electrical box and connect the relay wire (attached in the air panel) to CN10 in the electrical box as the following figure.

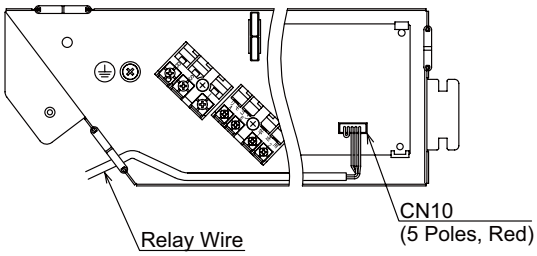

NOTE:
The wiring connections and the dip switch settings for other optional accessories should be referred "Installation and Maintenance Manual" of the optional accessories for the indoor unit.

(c) After connecting the relay wire to CN10, take it out to inside the ceiling.
Then, run it to the corner pocket cover with motion sensor. The wiring connection at the indoor unit should be referred “Installation and Maintenance Manual” of the indoor unit. When running the relay wire, run it to the corner pocket cover with motion sensor through the top of fixing plate for the indoor unit.
After running the relay wire, take the distance (from 100mm to 200mm) from the corner pocket cover to the relay connector as shown in the figure below.
After running the relay wire, clamp the extra length of the relay wire by the plastic band and store it at inside the ceiling.

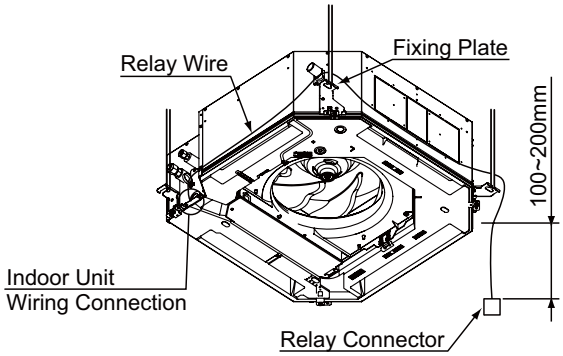

4. Installation

⚠CAUTION

Pay attention to perform the installation work at high-place using a stepladder, etc.

NOTICE

Do not move the louver by hand.
If moved, the louver mechanism will be damaged.
In addition, do not apply an excessive force to the air outlet part to prevent the breakage.

1) The suspension height of the indoor unit should be referred to “Installation & Maintenance Manual” of the indoor unit.
2) Do not touch the louver during the installation work.
3) Remove the air inlet grille from the air panel. While pushing both ends of knobs at the air inlet grille toward the arrow direction, open the air inlet grille until the angle of approximately 45° from the air panel surface. After lifting the air inlet grille keeping it inclined, draw the air inlet grille forward.
(Remove the filament tape (4 portions) fixing the air filter.)

< P-AP160NA1 >

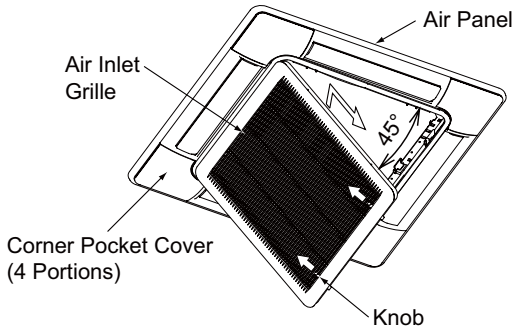

< P-AP160NAE >

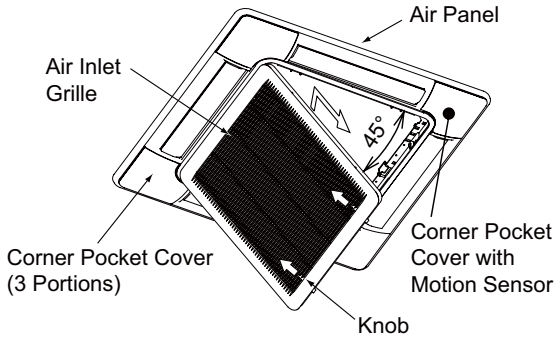

NOTE

Although the air inlet grille can be opened until the angle of 90° from the air panel surface, it can not be removed from the air panel.

4) Remove the corner pocket covers.
< P-AP160NA1 >
The corner pocket covers can be removed pulling Ⓐ part toward the arrow direction in the figure below.

< P-AP160NAE >
Remove the corner pocket covers and the corner pocket cover with motion sensor. They can be removed pulling Ⓐ part toward the arrow direction in the figure below.

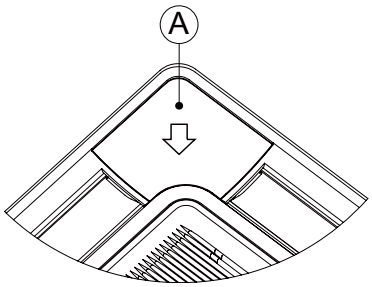

5) Pull down the U-shaped Hooks (2 portions) located at the indoor unit side.
6) Mount the air panel temporarily. Fit the corner position of the refrigerant pipe connection at the indoor unit and the position stamped as “Ref. Pipe 冷媒配管”. Then, catch the C-shaped hinges (2 portions) onto the U-shaped hooks (2 portions).
7) Fix the air panel to the fixing plate by factory-supplied long screws (M6 cross screws).

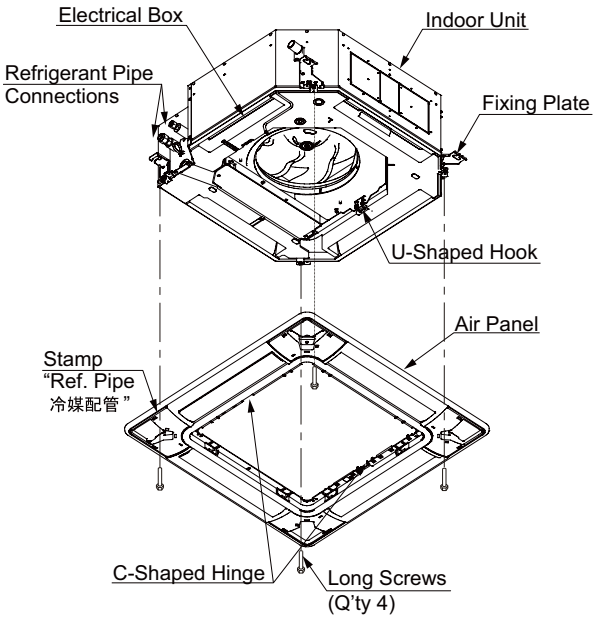

NOTE

- The fixing position of long screws for the air panel is inside the corner hole. Securely remove the corner pocket covers before mounting the air panel.
- Securely fit the corner position of the refrigerant pipe connection at the indoor unit and the position stamped as “Ref. Pipe 冷媒配管”.
  If not, it may cause air leakage.
- In the case of removing the corner pocket covers, if other part than Ⓐ is pulled, the fixing hook of the corner pocket cover may be damaged.

8) Check to ensure that the distance between the indoor unit undersurface and the false ceiling undersurface is 12 $^{+5}_{0}$mm (∗1) as shown in the figure below.
Tighten the long screws until touching the stopper to the fixing plate. Check to ensure that the distance between the fixing plate undersurface and the corner panel undersurface is 26mm (∗2) as shown in the figure below.
When tightening the long screws to prevent air leakage and to be no gap between the false ceiling surface and the indoor unit, the inner circumference of the air panel (the position to attach the air inlet grille) may be slightly deformed.
However, it is not abnormality.

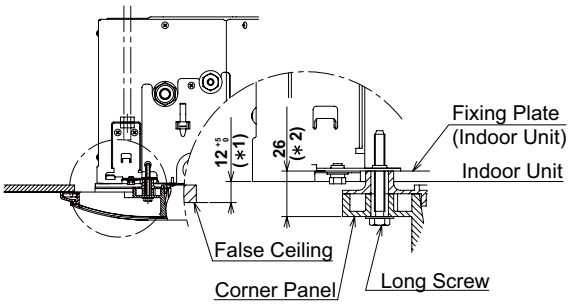

NOTE

- The standard installation dimension between the indoor unit undersurface and the false ceiling surface is 12 $^{+5}_{0}$mm. If the position and the levelness of the indoor unit are not correct, the air panel can not be installed correctly.
- In the case that the air panel is mounted with the filter box (optional accessory), secure the installation distance between the indoor unit undersurface and the false ceiling surface according to “Installation & Maintenance Manual” of the filter box.

NOTICE

- Firmly tighten the long screws. If the long screws are tightened insufficiently, it may cause the following failures.

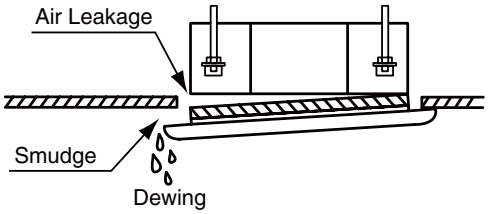

- When there is still the gap even after tightening firmly the long screws sufficiently, readjust the height of the indoor unit.

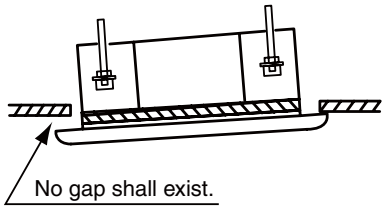

- The indoor unit height is adjustable from the corner hole if the levelness of the indoor unit, the drain piping, etc. are not affected by the adjustment.

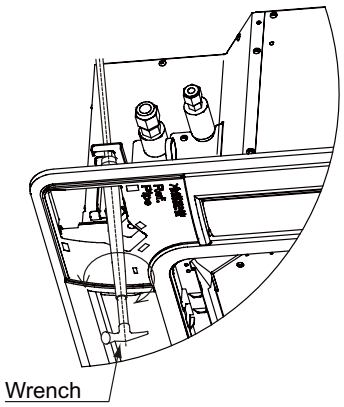

NOTE:
The significant height adjustment will cause water leakage from the drain pan.

9) If using a forming agent after installing the air panel, avoid touching the forming agent to the air panel. If the forming agent is touched to the air panel, it may cause the breakage and the falling down the air panel. In this case, completely wipe off the touched forming agent.

10) Attachment of Corner Pocket Cover

< For P-AP160NA1 >

Attach the corner pocket covers (4 portions) after the air panel is mounted completely.

(a) Catch the band at the rear side of the corner pocket cover onto the projection at the air panel as shown in the figure below.

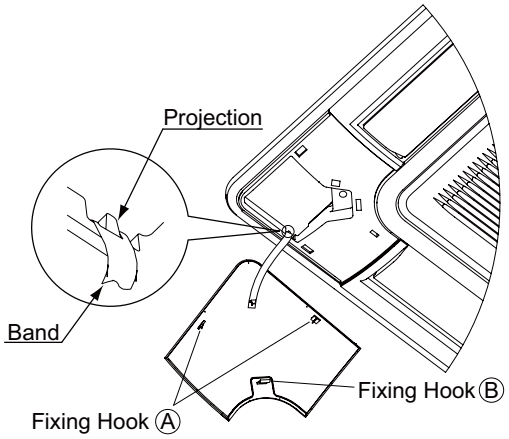

NOTE:
Catch securely the band onto the projection. If not, the comer pocket cover may fall down when removing it so that may cause injury.

(b) Insert the fixing hooks (2 portions) at Ⓐ to the air panel and insert the fixing hook (1 portion) at Ⓑ to the air panel.

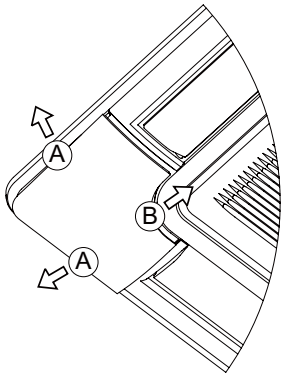

NOTE:
Catch securely the fixing hooks of the corner pocket cover to the air panel.

< For P-AP160NAE >
Attach the corner pocket covers (3 portions) and the corner pocket cover with motion sensor (1 portion) after the air panel is mounted completely.

(a) Catch the band at the rear side of the corner pocket cover onto the projection at the air panel as shown in the figure below (for 3 corners).

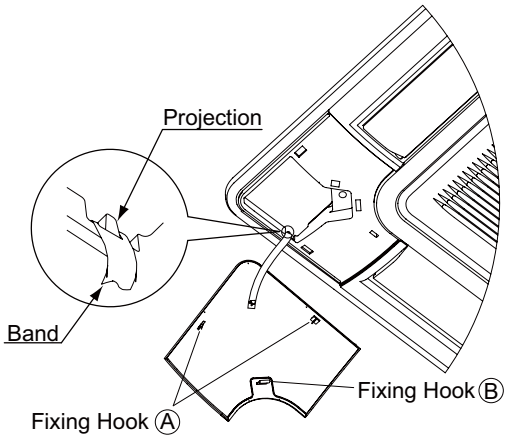

NOTE:
Catch securely the band onto the projection.
If not, the comer pocket cover may fall down when removing it so that may cause injury.

(b) Insert the fixing hooks (2 portions) at Ⓐ to the air panel and insert the fixing hook (1 portion) at Ⓑ to the air panel (for 3corners).

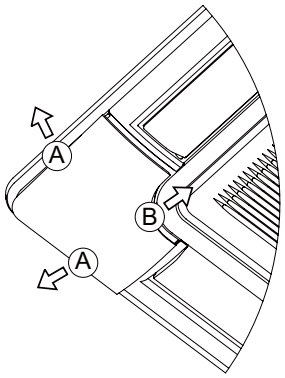

NOTE:
Catch securely the fixing hooks of the corner pocket cover to the air panel.
If not, the fixing hooks will be damaged.

(c) Draw out the relay wire from the corner pocket of the air panel. Connect the wiring for motion sensor at the corner pocket cover to the relay connector as the following figure.
After connecting, cover the relay connector connection by the wiring cover and fix the wiring cover by the plastic bands.

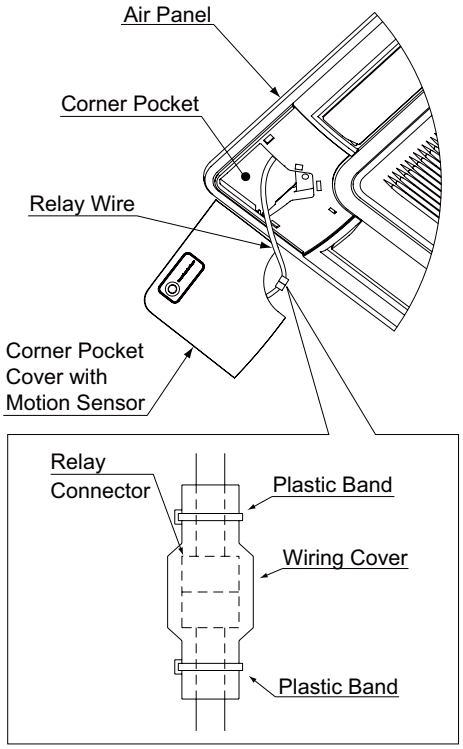

(d) Catch the band at the rear side of the corner pocket cover with motion sensor onto the projection at the air panel as shown in the figure below.

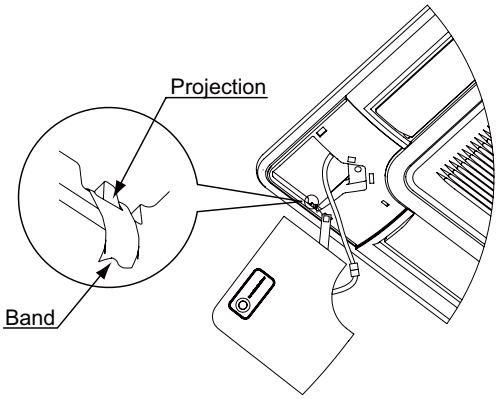

NOTE:
Catch securely the band onto the projection.
If not, the comer pocket cover may fall down when removing it so that may cause injury.

(e) While pushing the wiring into the corner pocket, insert the fixing hooks (2 portions) at Ⓐ to the square hole at the air panel, and push the corner pocket cover toward the arrow direction (Ⓐ). Then, insert the fixing hook (1 portion) at Ⓑ to the square hole at the air panel.

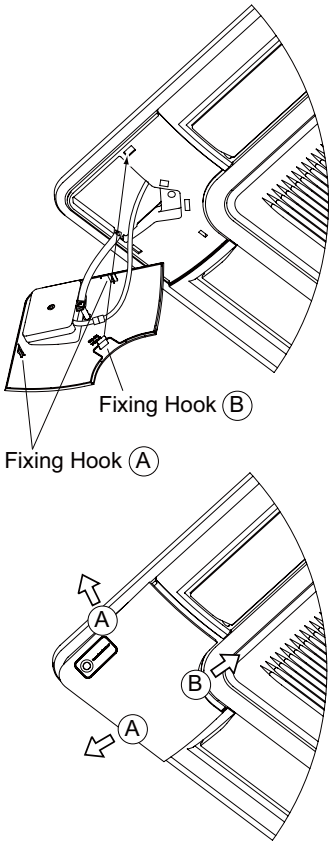

NOTE:
Catch securely the fixing hooks of the corner pocket cover to the air panel.
If not, the fixing hooks will be damaged.

11) In Case of Removing Corner Pocket Cover
Remove the corner pocket covers.
The corner pocket covers can be removed pulling Ⓐ part toward the arrow direction.

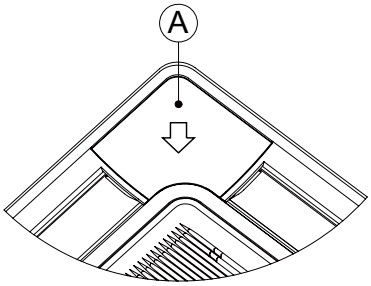

5. Electrical Wiring

⚠ WARNING

- **Perform securely the electrical wiring work. If the electrical work is not completed, heat generation at the connection, a fire or an electric shock may occur.**
- **Make sure that the wires are securely fixed in order not to apply an external force to the terminal connections of the wirings. If fixing is not completed, heat generation or a fire will occur.**

1) The following connectors are used in the air panel. Remove the tape fixing the wiring connectors on the air panel and pull out them as shown in the figure below. Connect them with the wiring connectors on the indoor unit.

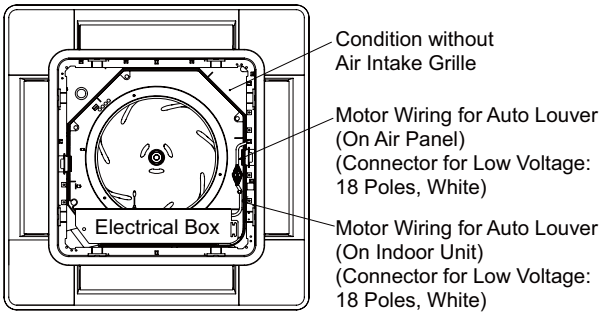

NOTICE

Before the electrical wiring work, turn OFF the power source. If the connectors are connected without turning OFF the power source, the auto swing louver can not activate.

2) After completing the wiring connection of the air panel, attach the air inlet grille. Perform the attaching work in the reverse procedure of removing. (Refer to item 3) of “Installation”.) Hook the swivel of the supporting string at Ⓐ to the hole at the air panel. The air inlet grille can be attached from any 4 directions by rotating it. When multiple indoor units are installed or requested from a user, the air intake grille direction can be selected freely.

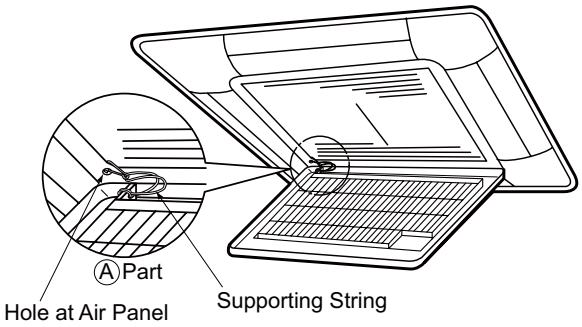

6. Test Run

1) After completing the installation of the air panel, the test run should be performed according to "Installation & Maintenance Manual" of the indoor unit.
2) Perform the checking work for the louver during the test run (For PC-ARF). Do not move the louver by hand. If moved, the auto-swing mechanism will be damaged.
   (a) Press "⏻" (run / stop), and the operation is started. Select the air flow direction by "◁" or "▷".
   (b) The louver angle is changed by pressing "△" or "▽".

LCD Indication

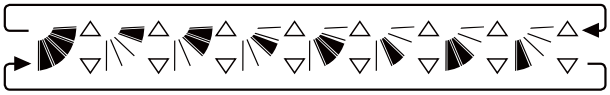

The auto swing operation will be started to select "" (auto swing). At this time, LCD indication displays the swing repeatedly.

7. Adjusting Louvers

Procedures for Adjusting Louvers and Air Flow Direction

Step 1
Switch ON the main power source.

Step 2
Start the fan operation by pressing "⏻" (run / stop) on the remote control switch.

Step 3
Press "△" or "▽" and select "" (auto swing). The auto swing operation is started, and is stopped by pressing this switch again.

Step 4
LCD indication shows the position of the swing louvers.

< Auto Swing Operation >

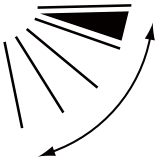

The mark "" moves continuously.

< Fixed Louver Angle >

The mark "" indicates the position of louvers.

NOTICE

- The adequate air flow direction may differ depending on the conditions (air conditioner's installation position, room structure or furniture layout, etc.) If the cooling or the heating is not well, adjust the air flow direction.
- The position of the louvers may not coincide with the louver position indicator on LCD during the auto swing operation. When fixing the louver angle, set it according to the louver position on LCD.
- Even if "△" or "▽" is pressed to stop the auto swing, the louver may not be stopped soon.
- If the cooling operation is performed under the condition with over 80% humidity, dew condensation may occur at the air panel or the louver.

⚠ CAUTION
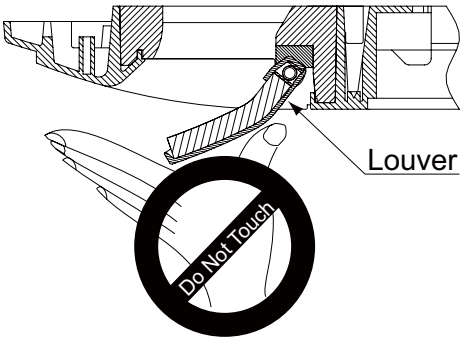
Do not move the louver by hand. If moved, the louver mechanism will be damaged. In addition, do not apply an excessive force to the air outlet part to prevent the breakage.