SPECIFICATIONS

temperzone

Model	**OPA 680RLTB1FPQ-Z** Econex
Configuration	Horizontal Supply Air
Item No. (Standard / Opposite Hand)	867-068-701 / 867-068-710
Configuration	Downward Supply Air
Item No. (Standard / Opposite Hand)	867-068-723 / 867-068-732
Cooling capacity (net) [1]	65.0 kW
Cooling capacity range (gross)	13.1 ~ 72.4 kW
Heating capacity [1]	63.5 kW
Heating capacity range	11.5 ~ 73.8 kW
Electrical input - cooling	18.1 kW
Electrical input - heating	15.9.8 kW
EER / AEER (cooling) [1]	3.59 / 3.57
COP / ACOP (heating) [1]	3.99 / 3.97
Operating Range (outdoor ambient) - cooling	–10°C ~ 50°C
Operating Range (outdoor ambient) - heating	–10°C ~ 25°C
Controller	UC8 (x2)
Refrigerant	R32
Refrigerant Charge	7.5 kg/sys.
Minimum floor area (@2.4m below ceiling diffuser)	30 m^2
Compressor oil type	POE-46 (NXG5020 or equivalent)
Compressor type	inverter + fixed scroll
Power supply [2]	3 ph. 400 V ac 50 Hz + N + E
Compressor (3ph.) run amps at rating cond.(inv./fixed)	16 A/ph.(x1) / 11.5 A/ph.(x1)
Compressor + VSD circuit breaker	32 A (x2)
Indoor fan motor size	EC Plug 500 dia. 3.65kW (x2)
Nominal air flow at rating conditions	3 500 l/s
Indoor fan motor (3ph.) - full load	4.8 A/ph. (x2)
Outdoor fan motor (3ph.) - full load	3.5 A/ph. (x2)
Outdoor fan - max. external static available@ 8 400 l/s	100 Pa
Control circuit breaker (internal)	2 A
Single phase socket circuit breaker	10 A
Running amps (total system) [1]	27 / 27 / 33 A
Max. running amps (total system)	42 / 43 / 49 A
RCD type recommended	type B, 30mA, 3 pole
Net weight (excl. cowl)	1214 kg
Shipping weight (excl. cowl)	1279 kg
Net Weight c/w Economiser	1290 kg

Accessories:

Filters - rated EU4/G4 disposable	019-400-004 500x500x50 (x9) [3]
Filters - rated EU4/G4 washable (NZ Only)	019-000-033 500x500x50 (x9) [3]
Drain tundish (2 per set; 2 sets required)	060-000-653

Refer to temperzone for other options.

[1] Tested in accordance with AS/NZS 3823
[2] Voltage range: 376–440V
[3] Filter sizes are nominal; refer to Temperzone for actual measurements.

25003

econex
nex gen R32 inverter

DIMENSIONS (mm)

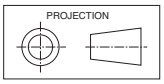

Not to Scale

OPA 680RLTB1FPQ01-Z Standard Hand, Horizontal Supply

	POINT LOADS (kg)			
	W	X	Y	Z
Eco Std	336	314	234	377
Eco Opp	377	234	314	336

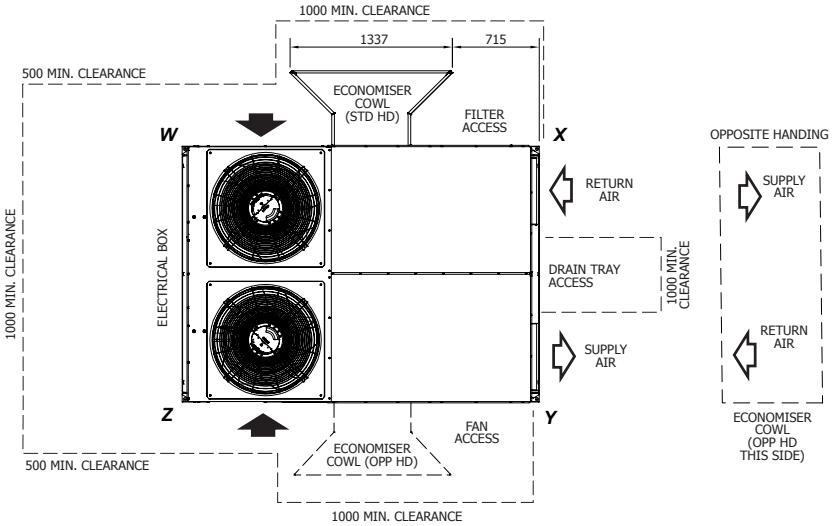

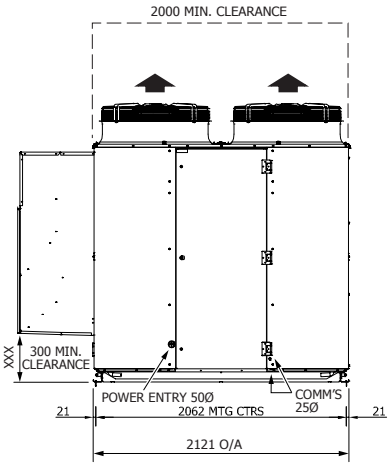

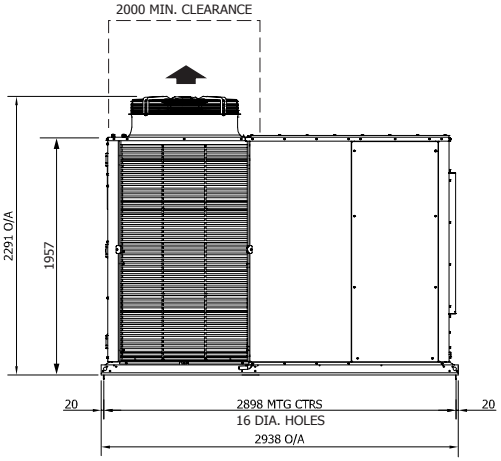

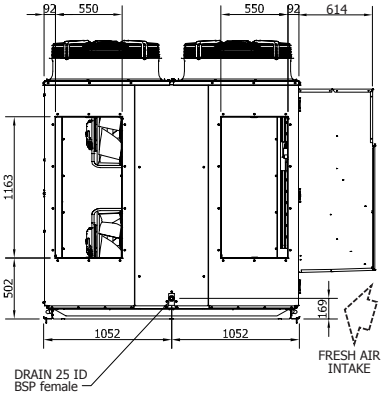

OPA 680RLTBFPQ23-Z
Standard Hand, Downward Supply

Clearances as above

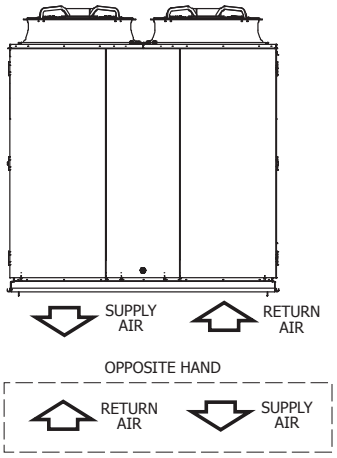

OPA 680RLTBFPQ45-Z
Standard Hand, Upward Supply

Clearances as above

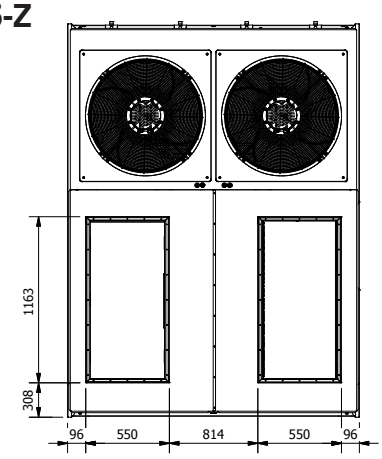

TOP VIEW

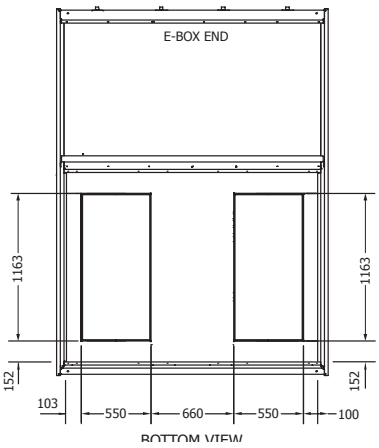

BOTTOM VIEW

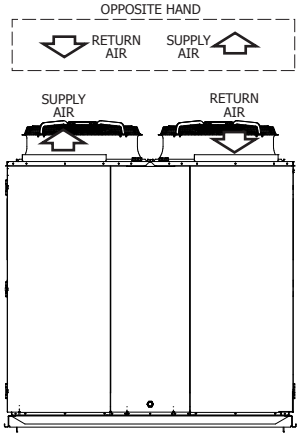

FRONT VIEW

NOTE
Specifications are subject to change without notice due to the manufacturer's ongoing research and development programme.

temperzone

Refer Sheet 4 for client wiring & descriptors

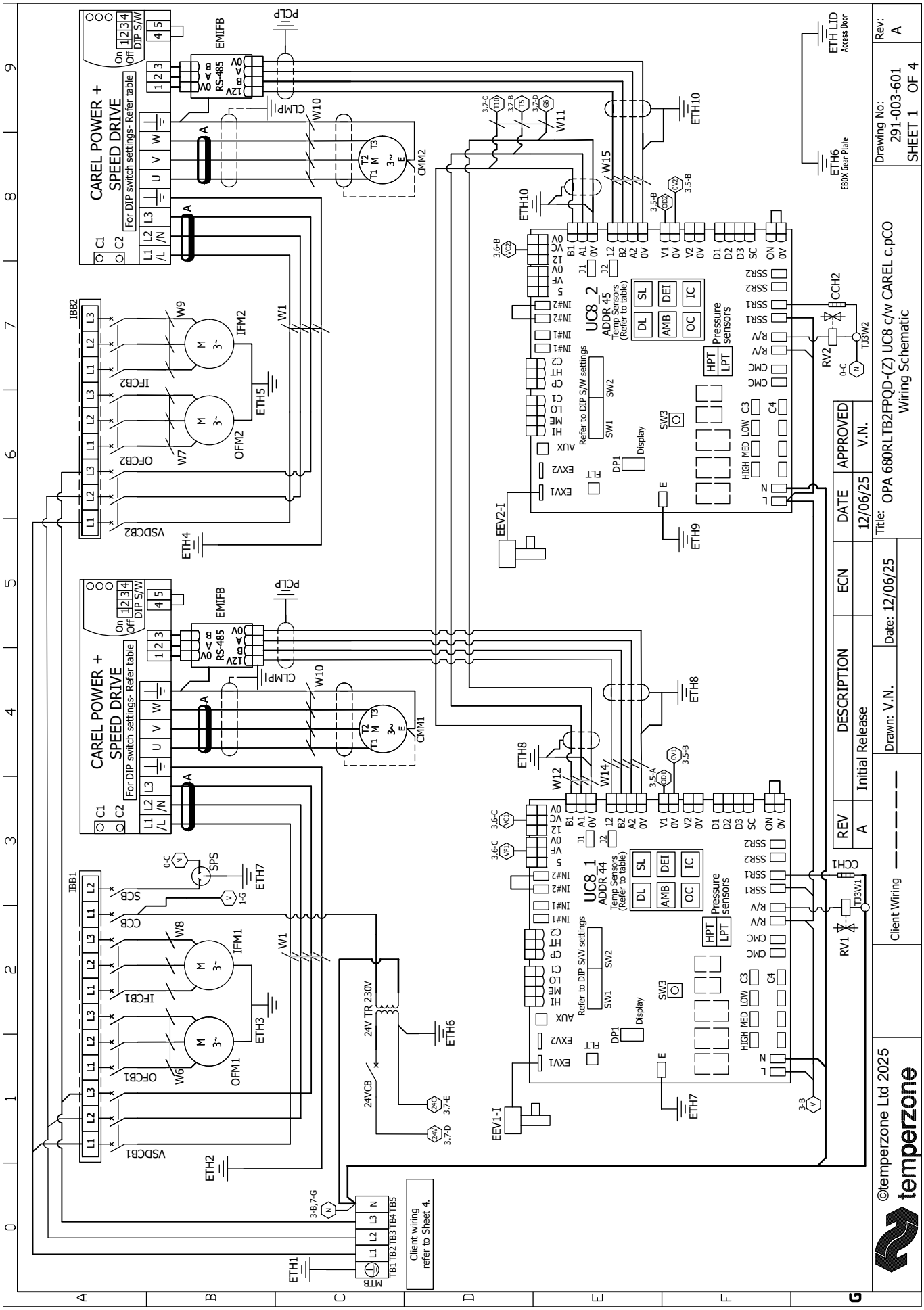

EBM FAN CONNECTIONS

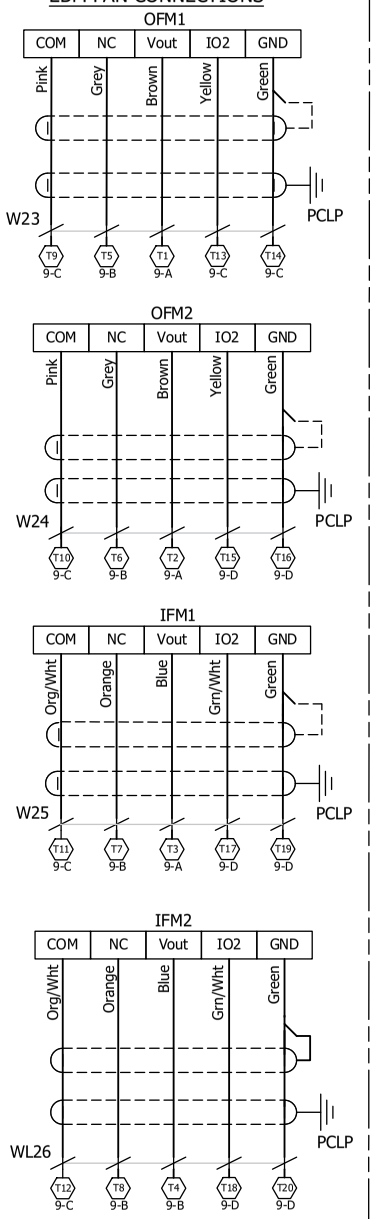

Notes:
1) For all fan fault relays use no more than 24V/1A. **DO NOT USE** 230V for fan fault relays.
2) All fan fault relays (FFx/FFCx) are linked together providing a series connection common fan fault.

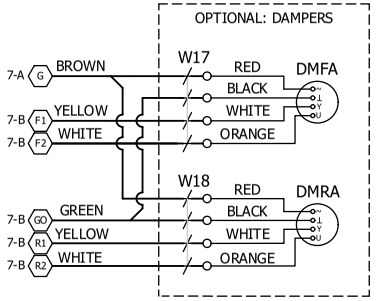

ACTUATOR TERMINALS	
~	24V AC
⊥	0V
Y	POSITION COMMAND 0-10Vdc
U	POSITION INDICATION FEEDBACK 0-10Vdc

Notes:
1) The actuators are modulating based on a 0-10Vdc signal however the actuator only begins to move after 2.0Vdc is applied.
2) The fresh air damper will be fully open at 10Vdc and fully closed at 2Vdc.
3) The return air damper will be fully open at 2Vdc and fully closed at 10Vdc.

EBOX TERMINAL BLOCK

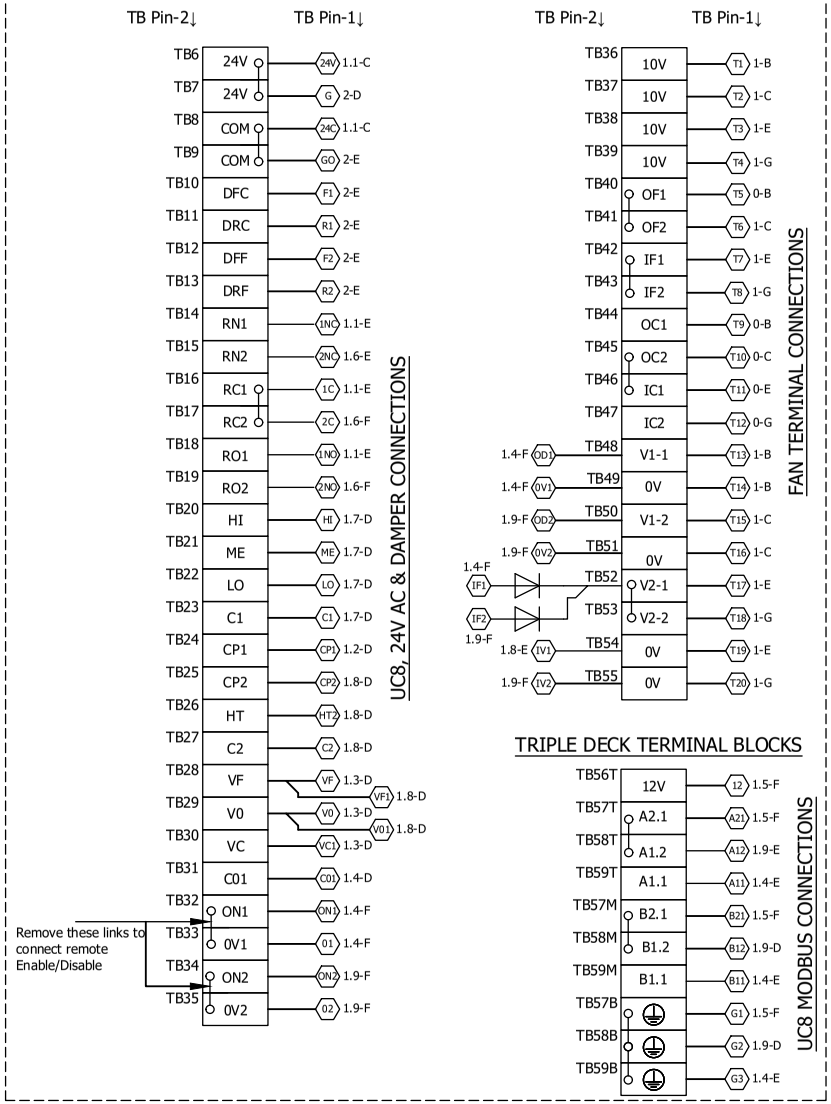

REV	DESCRIPTION	ECN	DATE	APPROVED
A	Initial Release		12/06/25	V.N.

©temperzone Ltd 2025
temperzone

Client Wiring

Drawn: V.N. Date: 12/06/25

Title: OPA 680RLTB1FPQ-(Z) Wiring Schematic

Drawing No: 291-003-571 SHEET 2 OF 3

Rev: A

CLIENT WIRING

Customer Connection (Refer I&M for details)

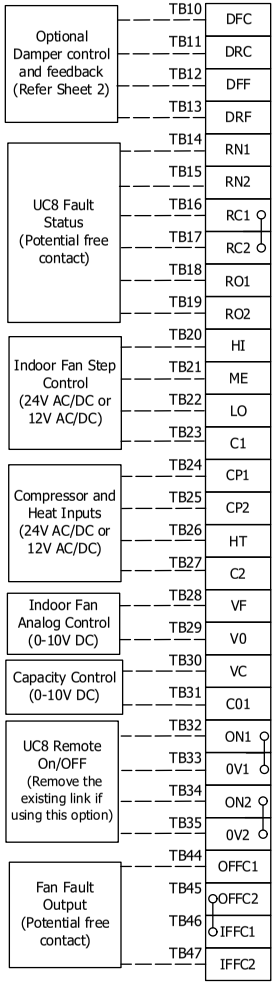

Customer scope Incoming Power Connection

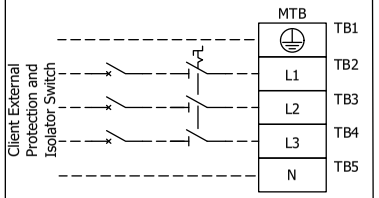

Power Supply 400V 50Hz

Important Notes:

24 Hour power required (on L1) for control circuit and crankcase heaters

Portable Residual Current Device (PRCD) shall be used with single phase socket.

Phase Loss Relay
- PWR (Green) Indicator lit when power is being supplied .
- RY (Yellow) Indicator lit when relay is operating.

Indoor Coil Layout

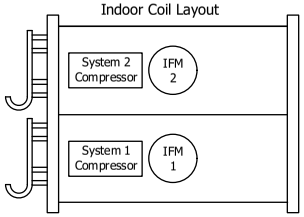

Overall System Layout

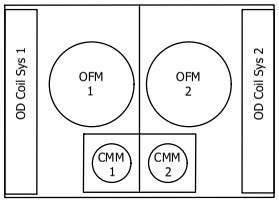

UC8 Configuration
* 1 x EEV per system

	Compressor	UC8 DIP SWITCHES
		ON
SYSTEM 1	INVERTER	1, 4, 6, 7, 9, 14
SYSTEM 2	FIXED SPEED	1, 4, 6, 7, 9, 11, 14

Modbus Devices Address	
UC8	44, 45
VSD	10

VSD DIP switch settings	
DIP switch	↑ On/Off ↓
1,4	On
2,3	Off

Ferrites			
	Part Number	Frequency Type	Number of Turns
A	012-001-074	High	1

Sensor(S) / Transducers (T) to UC8			
	Name	Type	Colour
DL	Discharge	S	Grey
SL	Suction	S	White
AMB	Ambient	S	Black
DEI	Deice	S	Blue
LPT	Suction Pressure	T	Grey
HPT	High Pressure	T	Grey

Note for connecting BMS or TZT.
Refer I&M and schematic drawing for wiring detail and configuration. Either BMS or TZT to be connected at one time. Default factory setting is done as Master slave control for connecting TZT-100.
Instructions for converting to Master-Master Control (BMS).
1. Turn off power to entire system.
2. Turn off dip switch 11 for system 2 fixed speed UC8 control.
3. Move the jumper between terminal blocks TB57T and TB58T to between TB58T and TB59T (refer to sheet 2).
4. Move the jumper between terminal blocks TB57M and TB58M to between TB58M and TB59M (refer to sheet 2).
5. Turn power back on.
6. Check UC8_2 (SYSTEM 2) address is set as 45. If it's address is 44, it needs to be changed to 45 using the pushbutton.

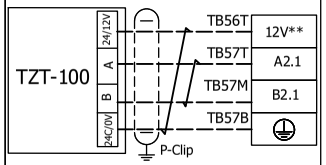

**+12VDC Power supply for TZT-100 only

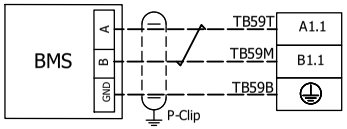

24VCB	24 Volt Circuit Breaker
CBL	Cable Marker
CCB	Control Circuit Breaker
CCH	Crankcase Heater
CMC	Compressor Motor Contactor
CMCB	Compressor Motor Circuit Breaker
CMM	Compressor Motor
CMOL	Compressor Motor Overload
DMF	Damper Motor Fresh Air
DMR	Damper Motor Return Air
EEV	Electronic Expansion Valve
EMIFB	Electromagnetic Interference Filter Board
ETH	Earth
FRB	Fault Relay Board
IBB	Insulated Bus Bar
IFCB	Indoor Fan Circuit Breaker
IFFC	Indoor Fan Fault Relay Output Common
IFM	Indoor Fan Motor
MTB	Main Terminal Block
OFCB	Outdoor Fan Circuit Breaker
OFM	Outdoor Fan Motor
OFFC	Outdoor Fan Fault Relay Output Common
PCLP	P Clip
PLR	Phase Loss Relay
RV	Reversing Valve
SCB	Socket Circuit Breaker
SPS	Single Phase Socket
TBXT	Terminal Block (number) Top
TBXM	Terminal Block (number) Middle
TBXB	Terminal Block (number) Bottom
TJ3W	Terminal Junction 3 Way
TR	Transformer
UC8	Unit Controller 8
VSD	Variable Speed Drive
VSDCB	Variable Speed Drive Circuit Breaker
0V	UC8 Enable link Common
0-10	Indoor / Outdoor Fan 0-10VDC analogue speed Control
10V	Indoor / Outdoor Fan 10VDC Supply Output
12V	RS485 12V Supply Output
24V	24VAC Internal Supply
Ax.x	RS485 A (+) Communication Signal
Bx.x	RS485 B (-) Communication Signal
C01	Compressor Analogue Speed Control Common
C1	Indoor Fan Fixed Three speed Control Common
C2	Cooling/Heating mode & Compressor On/OFF Common
COM	24VAC internal Supply Common
CP	Compressor ON / OFF Signal
DFC	Damper Motor Fresh Air 0-10Vdc Command
DFF	Damper Motor Fresh Air 0-10Vdc Feedback
DRC	Damper Motor Return Air 0-10Vdc Command
DRF	Damper Motor Return Air 0-10Vdc Feedback
IFF	Indoor Fan Fault Relay Output Contact Signal
OFF	Outdoor Fan Fault Relay Output Contact Signal
HI	Indoor Fan Fixed High speed Control Signal
HT	Cooling / Heating Mode Selection Signal
LO	Indoor Fan Fixed Low speed Control Signal
ME	Indoor Fan Fixed Medium speed Control Signal
ON	UC8 Enable link Contact
RC	UC8 Fault Relay Output Common Contact
RN	UC8 Fault Relay Output Normally Closed Contact
RO	UC8 Fault Relay Output Normally Open Contact
VC	Compressor 0-10VDC Analogue Speed Control Signal
VF	Indoor Fan 0-10vdc Analogue Speed Control Signal
V0	Indoor Fan Analogue Speed Control Common

REV	DESCRIPTION	ECN	DATE	APPROVED
A	Initial Release		12/06/25	V.N.

©temperzone Ltd 2025

temperzone

Client Wiring

Drawn: V.N

Date: 12/06/25

Title: OPA 680RLTB1FPQ-(Z) Wiring Schematic

Drawing No: 291-003-571 SHEET 3 OF 3

Rev: A

Refer 'Installation & Maintenance' pamphlet for more information.

© temperzone limited 2025